E-MOBILITY CONNECTIVITY SOLUTIONS

Product Catalog

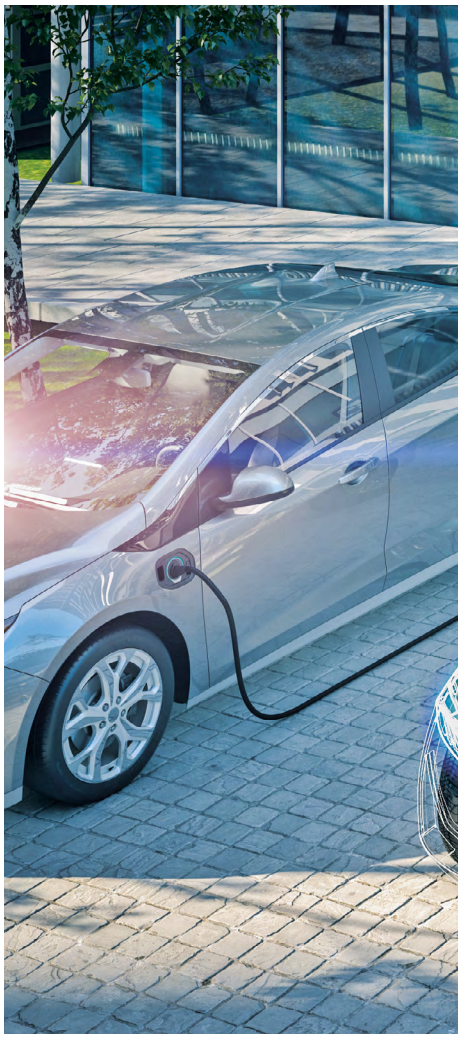

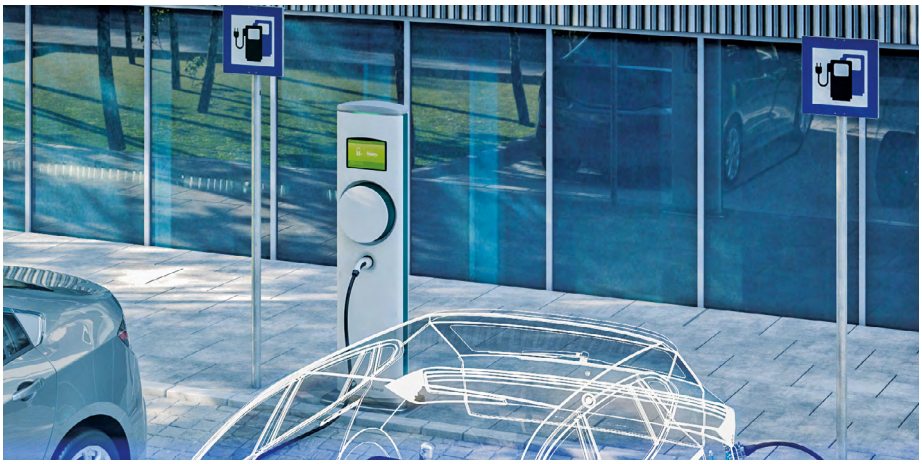

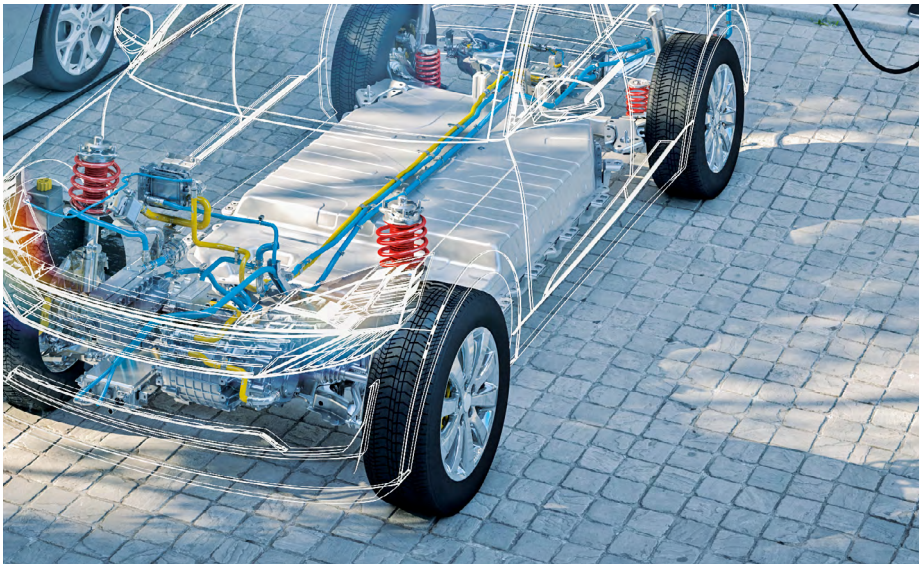

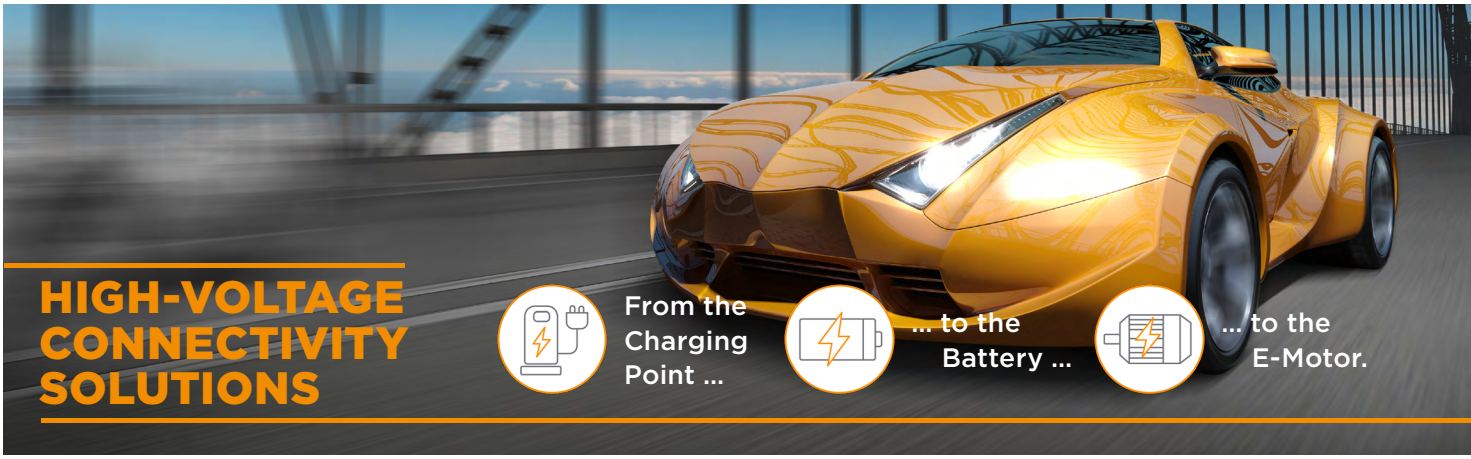

TE Connectivity's (TE) portfolio of connectivity solutions for hybrid and electric vehicles cover the entire range of electric powertrains, providing a complete line of connectors, headers, relays, contactors, harnesses and disconnects to safely connect and protect the power flow.

Our hybrid and electric mobility connectivity technologies leverage decades of experience with high-voltage generation, transmission and distribution. These are classified in the following four application areas:

HV AUXILIARY MODULES

- DC / DC Converter
- On-Board Charger
- HV Heater
- HV Climate Compressor

HV POWERTRAIN

- Inverter
- E-Motor
- HV Battery

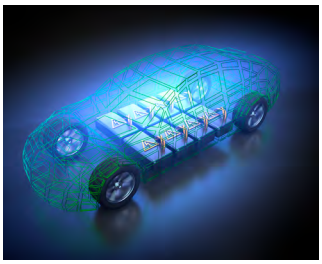

BATTERY CONNECTIVITY

- Battery Modules
- Battery Protection
- Battery Cells

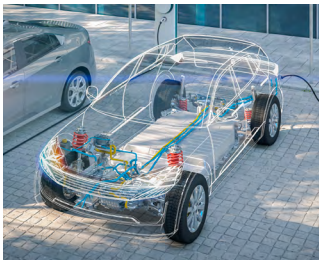

CHARGING INLET

- AC charging
- Fast charging
  - DC charging
  - Combined Charging System (CCS)

E-Mobility Connectivity Solutions	Page
Temperature & Derating Factor | Current Carrying Capability acc. to EN 60512-5-2	8
IP Code | Elements and Significance acc. to IEC 60529 and DIN 40050	8 – 9
1 HV INTERCONNECTION SYSTEM	
PCON High-Power Terminals | Introduction	11
PCON 12 Terminals	12
PCON 18 Terminals	13
PCON 21 Terminals	14
HV Interconnection Systems – Application Overview	16
AMP+ HVA 280 HV Interconnection System | Introduction	17
AMP+ HVA 280 HV Interconnection System – Overview Reference Part Numbers	18
AMP+ HVA 280 SE – Plug	19
AMP+ HVA 280 2p hi XE – Plug	20
AMP+ HVA 280 2p hm – Shunted HVIL Plug	21
AMP+ HVA 280 2p hm – Pass Through HVIL Plug	22
AMP+ HVA 280 2p hi SE – Intelligent Plug (Single Click)	23
AMP+ HVA 280 2p hi /3p xi – Discrete Header	24
AMP+ HVA 280 2p hx – 1 Piece Header	25
AMP+ HVA 280 2p hi – Inline Cap	26
AMP+ HVA 280 2p hm – Inline Cap	27
AMP+ HVA 280 2p hi / 3p xi – Multi-Bay Discrete Header	28
AMP+ HVA 280 3p xm XE – Plug	29
AMP+ HVA 280 3p xm XE – Plug (Single Click)	30
AMP+ HVA 280 2p hm – Pass-Through Plug (Single Click)	31
AMP+ HVA 280 2p hm – Shunted Plug (Single Click)	32
AMP+ HVA 280 2p – Header (Stitched)	33
AMP+ HVA 280 – Shipping Caps	34
AMP+ HVA 280 Connector System Kits	35
AMP+ HVU 280 HV Unshielded Interconnection System | Introduction	37
AMP+ HVU 280 2p xi XE – Plug	38
AMP+ HVU 280 2p xi – Inline Cap	39
AMP+ HVA 630 HV Interconnection System | Introducton	41
AMP+ HVA 630 2p hm – Plug	42
AMP+ HVA 630 2p hi – Header	43
AMP+ HVU 630 2P HV Interconnection System	45
AMP+ HVU 630 2p xi XEVR – Plug	46
AMP+ HVU 630 2p xi – Header	47

E-Mobility Connectivity Solutions	Page
1 HV INTERCONNECTION SYSTEM	
AMP+ HVA 630 5P HV Interconnection System | Introduction	49
AMP+ HVA 630 5p hm – Plug	50
AMP+ HVA 630 5p hx – Header, 180° Tabs	51
AMP+ HVA 630 5p hx – Header, 90° Tabs	52
AMP+ HVA 630 5p xm – Inline Cap	53
AMP+ HVA 630 Connector System Kits	54
AMP+ HVU 630 5P HV Unshielded Interconnection System | Introduction	55
AMP+ HVU 630 5p xm XEVR – Plug	56
AMP+ HVU 630 5p xi – Header	57
AMP+ HVU 630 5p hi XE – Plug	58
AMP+ HVU 630 5p hi – Header	59
AMP+ HVA 1200 HV Interconnection System | Introduction	61
AMP+ HVA 1200 2p hi XE – Plug 90°	62
AMP+ HVA 1200 2p hi XE – Plug 180°	63
AMP+ HVA 1200 2p hi – Header	64
HC-STAK 25 HV Interconnection System | Introduction	65
HC-STAK 25 2p hi – Plug 90°	66
HC-STAK 25 2p hi – Header	67
AMP+ HVP 800 HV Interconnection System | Introduction	69
AMP+ HVP 800 1p hi XE – Plug 90°	70
AMP+ HVP 800 1p hi XE – Plug 180°	71
AMP+ HVP 800 1p hi – Header	72
AMP+ HVP 800 2p hi XE – Plug 90°	73
AMP+ HVP 800 2p hi XE – Plug 180°	74
AMP+ HVP 800 2p hi – Header	75
AMP+ HVP 800 3p hi XE – Plug 90°	76
AMP+ HVP 800 3p hi XE – Plug 180°	77
AMP+ HVP 800 3p hi – Header	78
AMP+ HVP 800 Connector System Kits	79
AMP+ HVP 1100 HV Interconnection System | Introduction	81
AMP+ HVP 1100 1p hi XE – Plug 90°	82
AMP+ HVP 1100 1p hi XE – Header	83
AMP+ HVP 1100 Connector System Kits	84

E-Mobility Connectivity Solutions

	Page
1 HV INTERCONNECTION SYSTEM	
AMP+ IPT Shielded Ring Tongue Terminal | Introduction	85
AMP+ IPT 1p xi Shielded Ring Tongue Terminal	86
AMP+ IPT 2p xi Shielded Ring Tongue Terminal	87
AMP+ IPT 3p xi Shielded Ring Tongue Terminal	88
AMP+ IPT Connector System Kits	89
AMP+ HVU 2100 HV Unshielded Interconnection System | Introduction	91
AMP+ HVU 2100 2p xi XE – Plug	92
AMP+ HVU 2100 2p xi – Header	93
2 AMP+ CHARGING INLETS – CABLE ASSEMBLIES AND COMPONENTS	
AMP+ Charging Inlets – Cable Assemblies and Components | Introduction	95
AMP+ Charging Inlet Type 1 + Cable Assemblies	96
AMP+ Charging Inlet Type 2 + Cable Assemblies	97
AMP+ Charging Inlet Type GB + Cable Assemblies	98
AMP+ Charging Inlet, Type 1, Combined Charging System (CCS 1)	99
AMP+ Charging Inlet, Type 2, Combined Charging System (CCS 2)	100
AMP+ Charging Inlet, Type 1, AC	101
AMP+ Charging Inlet, Type 2, AC	102
AMP+ Charging Inlet, Type GB, AC	103
3 MANUAL SERVICE DISCONNECT	
Manual Service Disconnect | Introduction	105
AMP+ Manual Service Disconnect – Plug	106
AMP+ Manual Service Disconnect – Receptacle	107
AMP+ Manual Service Disconnect – Plug for ICT Applications	108
AMP+ Manual Service Disconnect – Receptacle for ICT Applications	109
4 HIGH VOLTAGE RELAYS & CONTACTORS	
High Voltage Relays & Contactors | Introduction	111
Mini K HV Precharge Relays	112
EVC 80 Main Contactor	113
EVC 135 Contactor	114
EVC 175 Main Contactor – Side Mount Version	115
EVC 175 Main Contactor– Bottom Mount Version	116

E-Mobility Connectivity Solutions	Page
4 HIGH VOLTAGE RELAYS & CONTACTORS	
EVC 250 Main Contactor	117
EVC 250-800 Main Contactor	118
EVC 500 Main Contactor	119
TE Connectivity's KISSLING Products	121
5 APPLICATION TOOLING	
High Voltage Cable Processing Solutions	123
Flexible High Force Processing Solutions	124
High Force Terminating Solutions	125
High Voltage Wire Processing	126
High Voltage Cable Prep Spare Tooling Part Numbers	127
HV-CP Features	127
High Voltage Wire Termination	128
Side-by-Side Comparison	129
HV-20T & HF-20T Features	129
6 APPENDIX	
Standards	130
Insulation Coordination for Electrical Connectors in Low Voltage Plants	131
Measurement of Clearances	132 – 133
Measurement of Creepage	134 – 135
TE CONNECTIVITY ONLINE	**138**
GLOBAL CONTACTS	**139**
IMPRINT	**139**

NOTES

Temperature & Derating Factor | Current Carrying Capability acc. to EN 60512-5-2

Current Carrying Capability:

Except specific comment or nota, current carrying capability value is given at temperature 85°C and considering a derating factor of 20% according to specification DIN EN 60512-5-2.

IP Code | Elements and Significance acc. to IEC 60529 and DIN 40050

1st Digit	Against Foreign Objects (incl. Dust)	
0		Not protected.
1	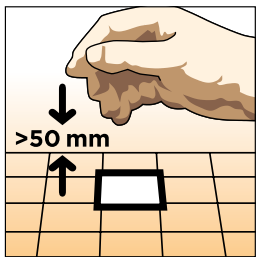	Protected against solid objects greater than 50 mm (ex. back of hand).
2	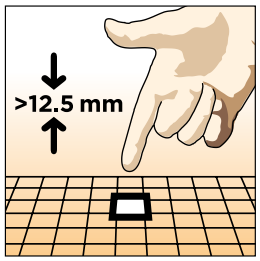	Protected against solid objects greater than 12.5 mm (ex. finger).
3	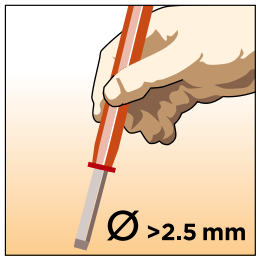	Protected against solid objects greater than 2.5 mm (ex. tool).
4	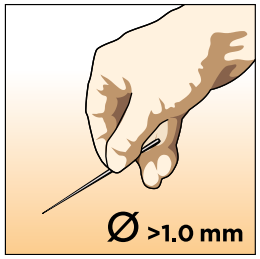	Protected against solid objects greater than 1.0 mm (ex. wire).

1st Digit	Against Foreign Objects (incl. Dust)	
5K		Dust protected.
6K		Dust tight.

IP Code | Elements and Significance acc. to IEC 60529 and DIN 40050

2nd Digit	Against Water		2nd Digit	Against Water	
0		Not protected.	5		Protected against jetting water.
1		Protected against vertically dripping water.	6		Protected against powerfully jetting water.
2	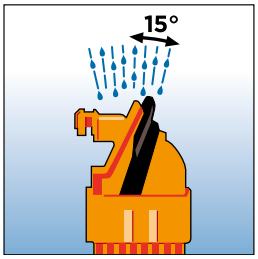	Protected against dripping water when tilted up to 15°.	6K		Protected against powerfully jetting water with increased pressure (Automotive).
3	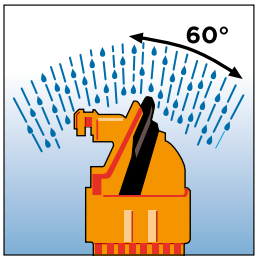	Protected against spraying water (up to 60° inclination).	7	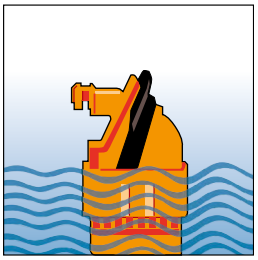	Protected against the temporary effects of immersion up to 1 meter.
4		Protected against splashing water.	8	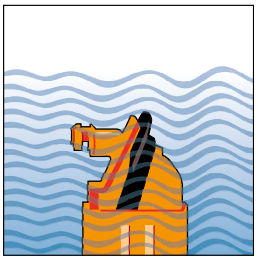	Protected against continuous submersion agreed with customer, but more severe than code 7.
4K		Protected against splashing water with increased pressure.	9K		Protected against high-pressure/ steam-jet cleaning (Automotive).

NOTES

PCON HIGH-POWER TERMINALS INTRODUCTION

PCON high-power terminals are specifically designed to support the increased connectivity requirements in high-voltage interconnection systems of hybrid and all-electric vehicles.

PCON 12, PCON 18 and PCON 21 terminals, have a common body design optimized for maximum vibration resistance while minimizing mating forces. Each is available with 90° and 180° mating directions and accommodates wire sizes ranging from 5 mm^2 to 95 mm^2 supporting continuous currents up to 400 A.

In addition, the PCON terminals are designed to accept touch-safe protection features integrated into the tab housing according to IEC 60529 IP2XB and UL-finger standards for EV powertrain applications therefore enabling safe and easy assembly and maintenance.

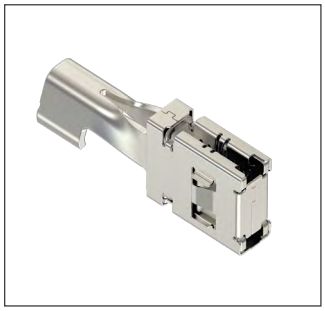

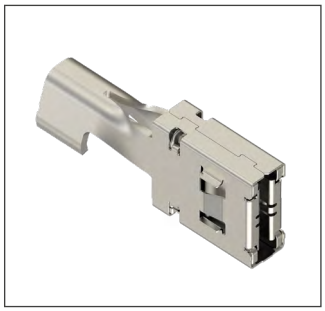

PCON 12 Terminals

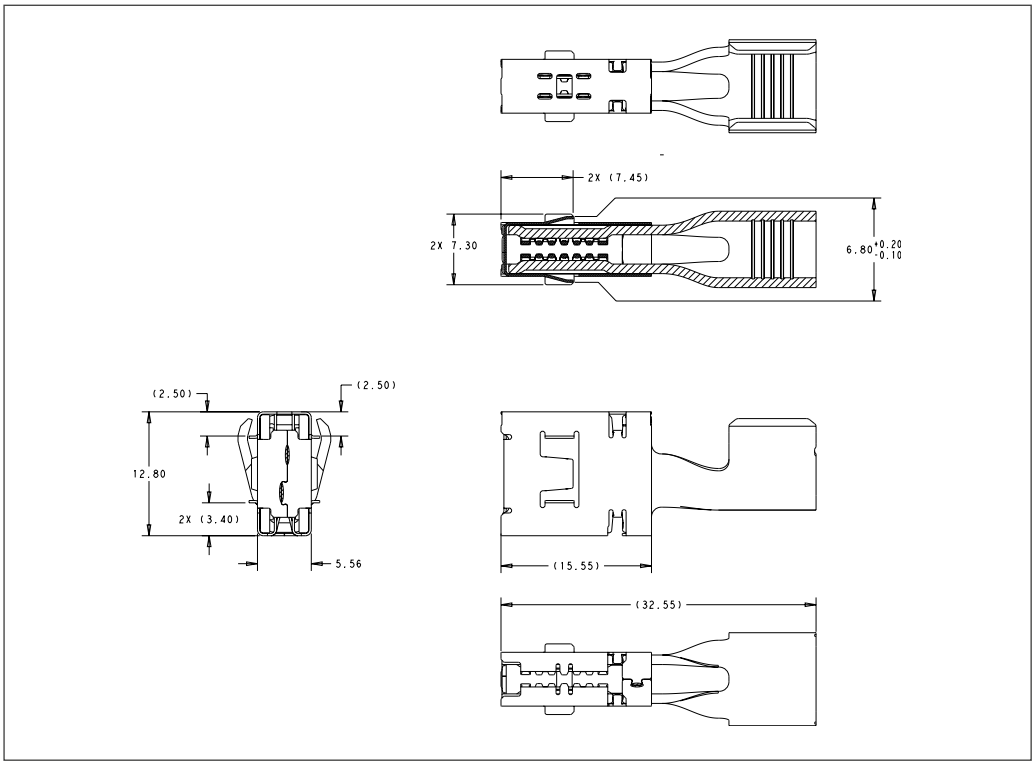

Applications

- On-Board Charger
- Inverter
- HV Battery
- E-motor

Technical Features

Mating Direction:
90° / 180°

Wire Range:
5 mm² to 16 mm²

Current Range (at 80°C):
Up to 120 A

Contact Normal Force:
Approx. 3.3 N

Spring Plating:
Ag / Ni

Body Plating:
Ag / Ni

Crimping / Welding:
Crimped

Terminal Style:
Receptacle

Tab Size
(with / without finger protection):
10 x 1.2 mm / 12 x 1.2 mm

Voltage Rating:
up to 1,000 VDC

Temperature Range:
-40°C to 125°C

Vibration Level:
USCAR-1 Class V1

Product Specification:
108-32671

Application Specification:
114-162014

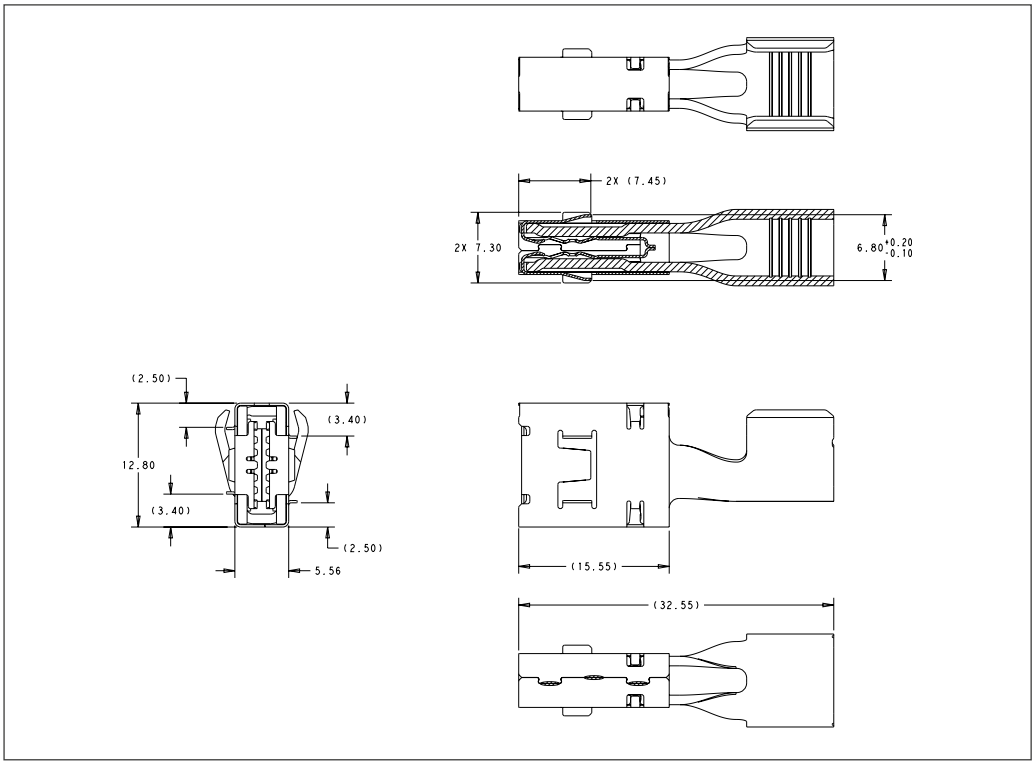

Ordering Information PCON 12 Terminals

Product Name	Product Category	Orientation	Wire Size	Part Number
PCON 12	Terminals	90°	5 – 8 mm²	1-2840573-1
			10 – 16 mm²	1-2840573-2
		180°	5 – 8 mm²	1-2840575-1
			10 – 16 mm²	1-2840575-2

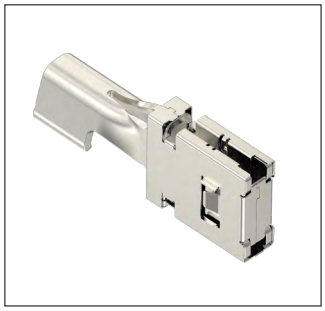

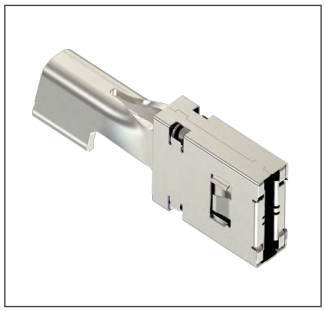

PCON 18 Terminals

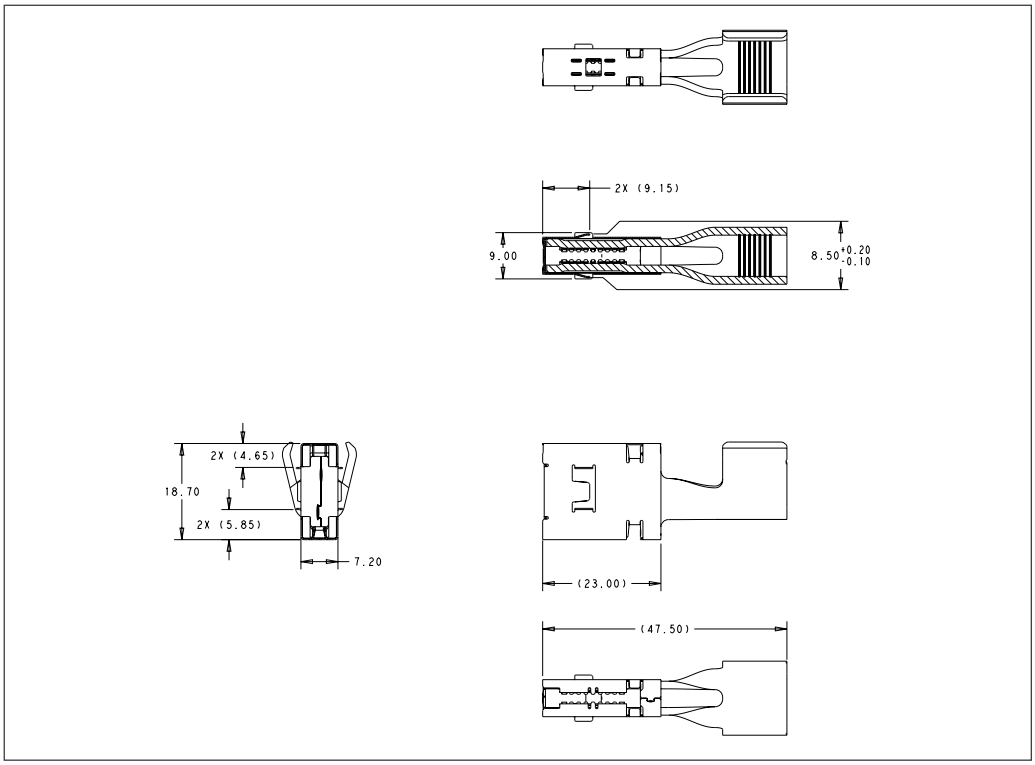

Applications

- On-Board Charger
- Inverter
- HV Battery
- E-motor

Technical Features

Mating Direction:
90° / 180°

Wire Range:
12 mm^2 to 35 mm^2

Current Range (at 80°C):
Up to 180 A at 80°C (35 mm^2)

Contact Normal Force:
Approx. 3.3 N

Spring Plating:
Ag / Ni

Body Plating:
Ag / Ni

Termination Type:
Crimped

Terminal Style:
Receptacle

Tab Size
(with / without finger protection):
15 x 1.8 mm / 18 x 1.8 mm

Voltage Rating:
up to 1,000 VDC

Temperature Range:
-40°C to 125°C

Vibration Level:
USCAR-1 Class V1

Product Specification:
108-32683

Application Specification:
114-162015

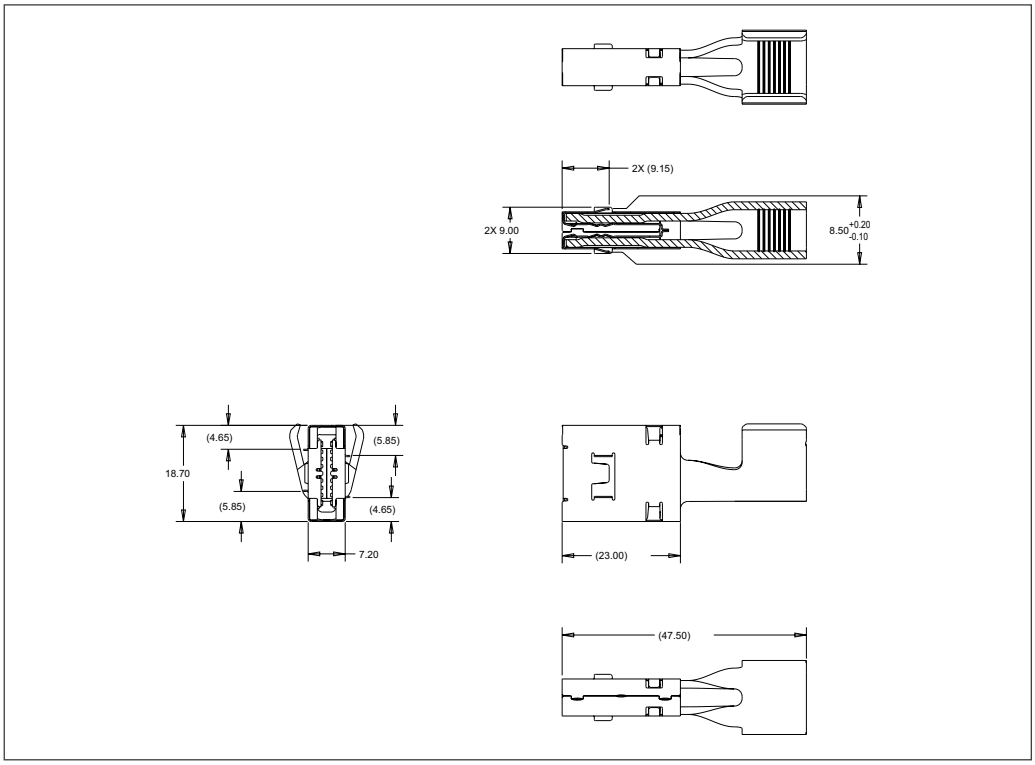

Ordering Information PCON 18 Terminals

Product Name	Product Category	Orientation	Wire Size	Part Number
PCON 18	Terminals	90°	12 – 20 mm^2	1-2840578-1
			25 – 35 mm^2	1-2840578-2
		180°	12 – 20 mm^2	1-2840580-1
			25 – 35 mm^2	1-2840580-2

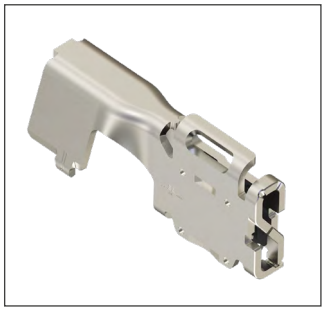

Applications

- Inverter
- E-motor
- DC fast charging

Technical Features

Mating Direction:
90° / 180°

Conductor Cross Sections:
25 mm² to 95 mm²

Current Range (at 80°C):
Up to 400 A at 80°C (95 mm²)

Contact Normal Force:
Approx. 3.5 N

Spring Plating:
Ag / Sn / Ni

Body Plating:
Sn / Ni

Crimping / Welding:
Crimped

Terminal Style:
Receptacle

Tab Size
(with / without finger protection):
15.3 x 3 mm / 21 x 3 mm

Voltage Rating:
up to 1,000 VDC

Temperature Range:
-40°C to 180°C

Vibration Level:
SG 2 (LV 215-1)

Product Specification:
108-94638

Application Specification:
114-94511

PCON 21 Terminals

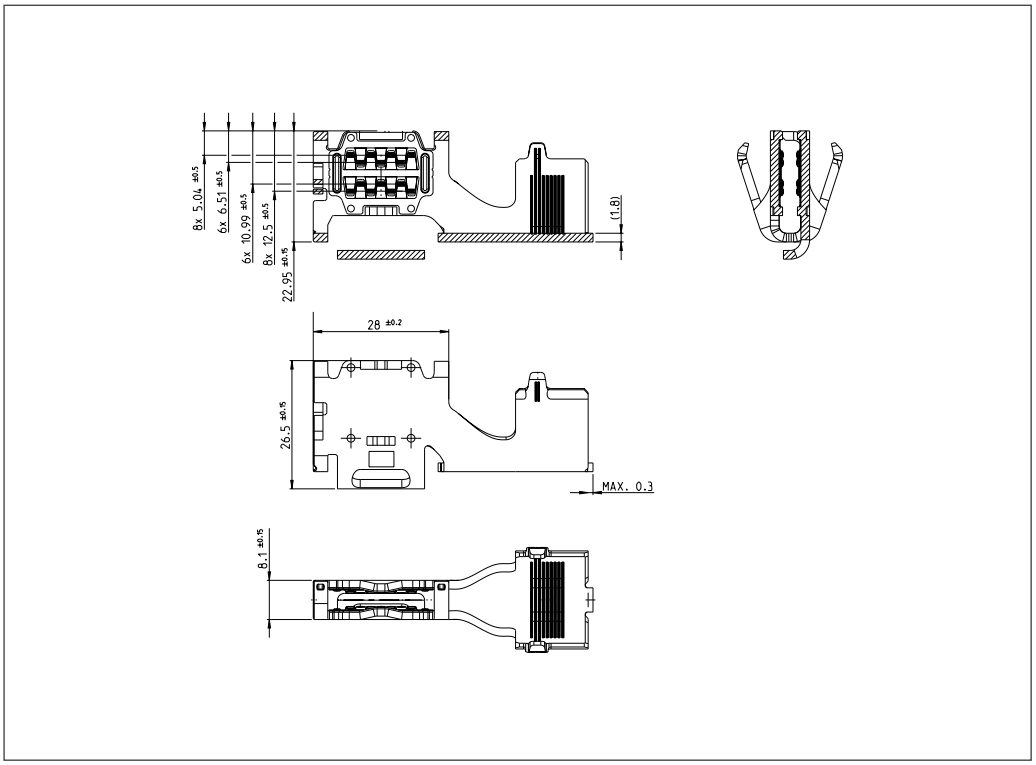

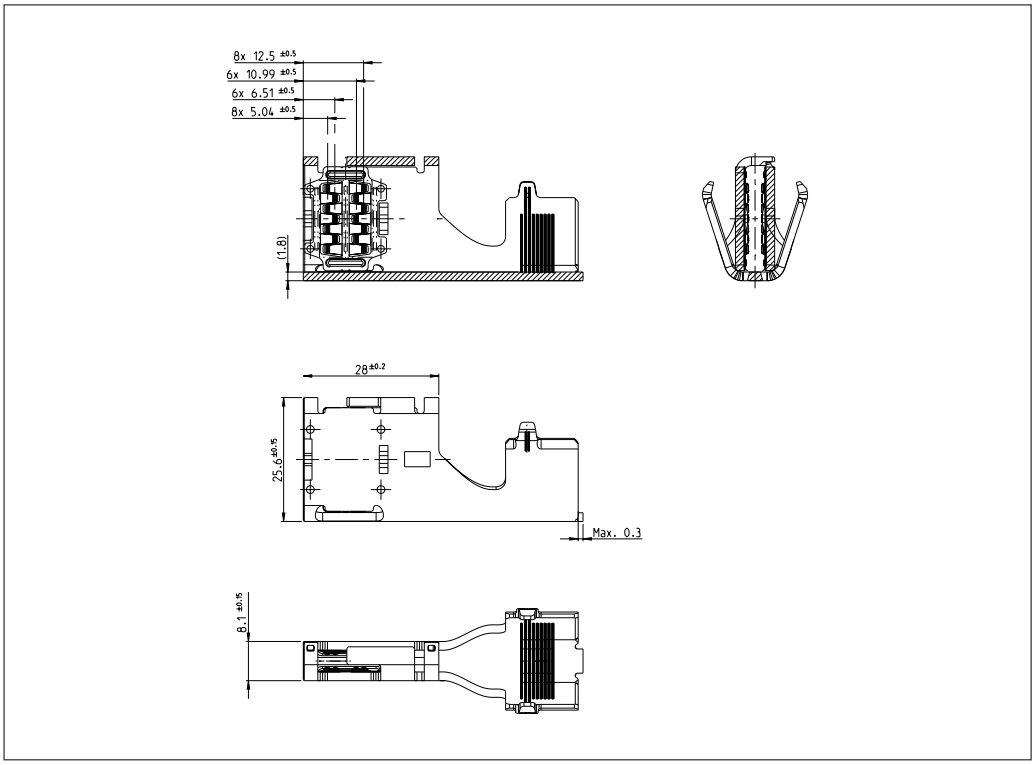

Ordering Information PCON 21 Terminals

Product Name	Product Category	Orientation	Wire Size	Part Number
PCON 21	Terminals	90°	25 – 50 mm²	2317017-1
			70 – 95 mm²	2317017-2
		180°	25 – 50 mm²	2317680-1
			70 – 95 mm²	2317680-2

NOTES

HV INTERCONNECTION SYSTEMS APPLICATIONS OVERVIEW

TE Connectivity's competitive portfolio covers the entire vehicle electrification spectrum according to LV 215-1 and USCAR standards.

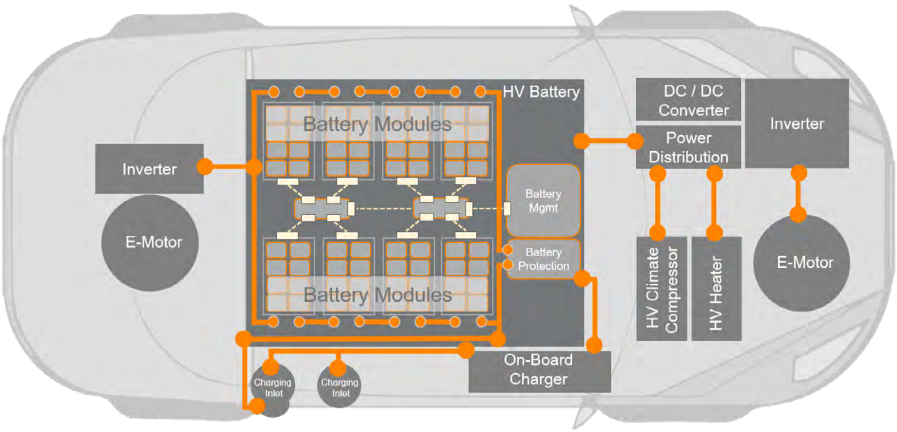

HV Interconnection Systems **Products & Applications Overview**	HV Auxiliary Modules				HV Powertrain		
	DC / DC Converter	HV Heater	HV Climate Compressor	On-Board Charger	Inverter	E-Motor	HV Battery
AMP+ HVA 280 HV Interconnection Systems 	●	●	●	●			
AMP+ HVU 280 HV Interconnection Systems 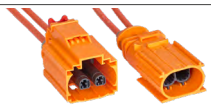	●	●	●	●			
AMP+ HVA 630 2p HV Interconnection Systems 	●	●	●	●			
AMP+ HVU 630 2p HV Interconnection Systems 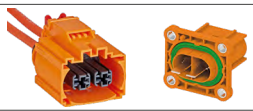	●	●	●	●			
AMP+ HVA 630 5p HV Interconnection Systems 				●			
AMP+ HVU 630 5p HV Interconnection Systems 				●			
AMP+ HVA 1200 HV Interconnection Systems 				●	●	●	●
HC-STAK 25 HV Interconnection Systems 					●	●	●
AMP+ HVP 800 HV Interconnection Systems 					●	●	●
AMP+ HVP 1100 HV Interconnection Systems 					●	●	●
AMP+ IPT HV Interconnection Systems 					●	●	●
AMP+ HVU 2100 HV Interconnection Systems 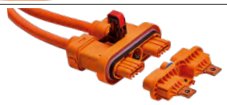					●	●	●

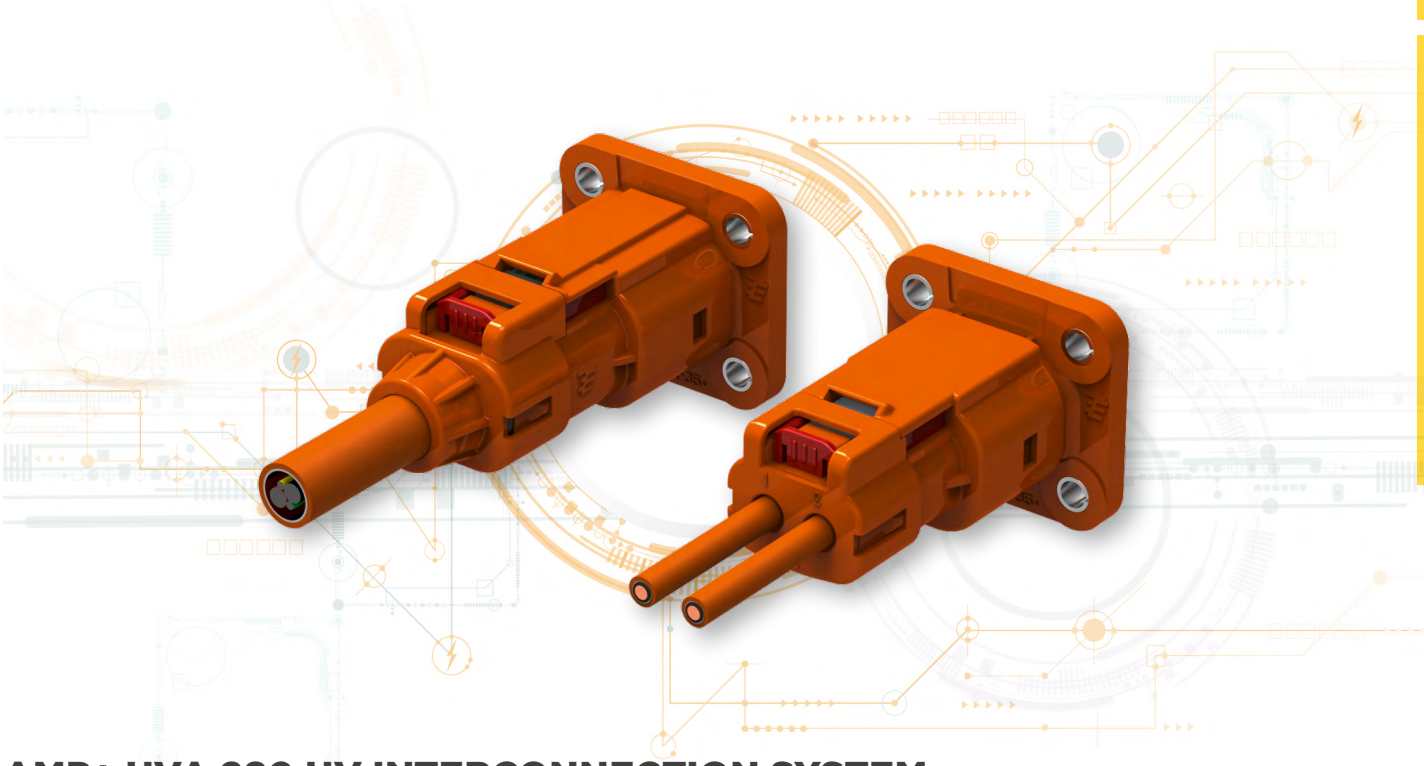

AMP+ HVA 280 HV INTERCONNECTION SYSTEM INTRODUCTION

The AMP+ HVA 280 low-medium current interconnection system is a two- or three-pole, finger-proof and touch safe connector and header system. Its proven design enhances manufacturability, packaging and offers great flexibility.

The connector system provides multiple latching options and an integrated internal HVIL, allowing for package size optimization and routing flexibility.

In addition, the HVA 280 product family includes a discrete header design unique to the industry which improves packaging and manufacturing efficiency with a two-stage floating latch for increased system safety.

The HVA 280 family offers over 3,000 configuration options providing solutions for a wide variety of device and wire harness applications such as battery pack, DC/DC converter, on-board charger, HV electric heater, climate compressor and power distribution.

Naming Convention
HVA 280 Interconnection System

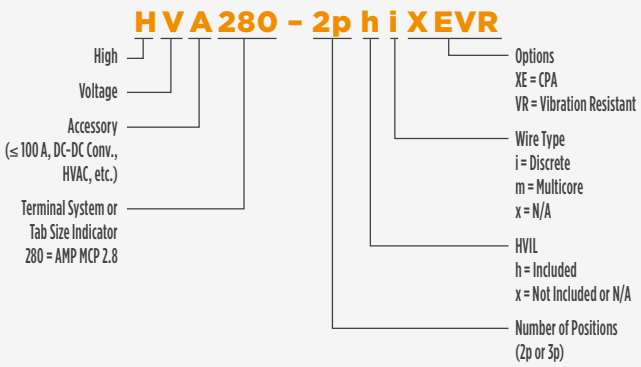

AMP+ HVA 280 HV Interconnection System – Overview Reference Part Numbers

Plugs	2 Positions						3 Positions		Intelligent Plug
	Individual Cable		Multicore Cable				Multicore Cable only		
	2 Stage	Single Click	2 Stage		Single Click		2 Stage	Single Click	Single Click
	Shunted HVIL only		Pass Thru HVIL	Shunted HVIL	Pass Thru HVIL	Shunted HVIL	No HVIL		Shunt
Part Numbers	2103176 2103750	2103749	2103163	2103014	2103531	2103532	2103163	2103014	2103744

Headers	2 Positions		3 Positions	2 Bay Header	3 Bay Header
	Single Piece	Discrete	Discrete	Discrete	Discrete
Part Numbers	2103124	2103247	2103247	2103346	2103340

Inner Housing for Discrete Headers	2 Positions	3 Positions
Part Numbers	2103245 2103722	2103321

In-Line Cap	2 Positions		3 Positions
	Individual Cable	Multicore Cable	Multicore Cable
Part Numbers	2103221 2103220	2103219	2103240

* Drawing number is NOT the order number!

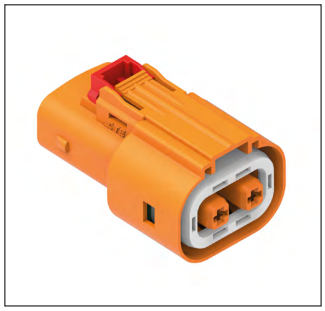

Applications

- DC / DC Converter
- HV Heater
- HV Climate Compressor
- On-Board Charger

Technical Features

Poles:
2

Terminal Size / System:
AMP MCP 2.8

Conductor Cross-Sections:
2.5 mm^2 to 4 mm^2

Wire Type:
Single-core

Voltage Rating:
1,000 VDC

Temperature Range:
-40°C to +125°C

Current Carrying Capability:
Derating factor of 10%
40 A at 85°C

IP Rating, Mated:
IP67, IP6K9K

IP Rating, Unmated:
IP2XB

HV Interlock Option:
Shunted
(shorting-bar in the connector

CPA:
Yes

Fire Classification:
HB

Vibration Level:
USCAR-2 Class V1

Shielding / Options:
Yes

EMC Shielding Resistance:
10 mΩ

Available Codings:
A, B, D, E, F, G

Product Specification:
108-2394

Application Specification:
114-32156

AMP+ HVA 280 SE – Plug

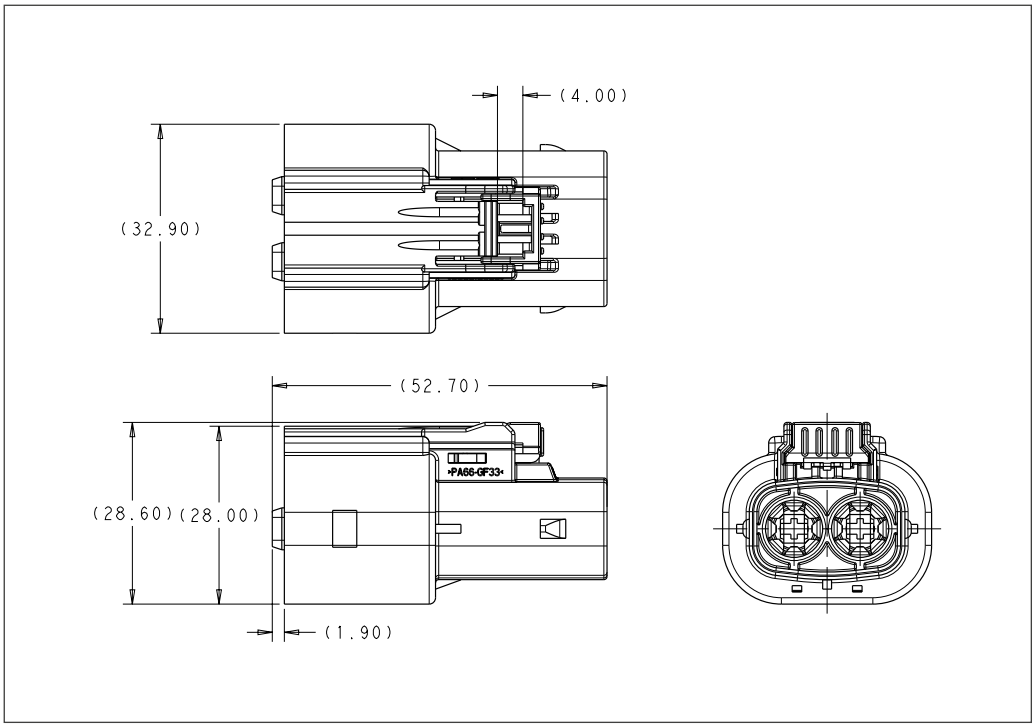

Drawing 2103628 *

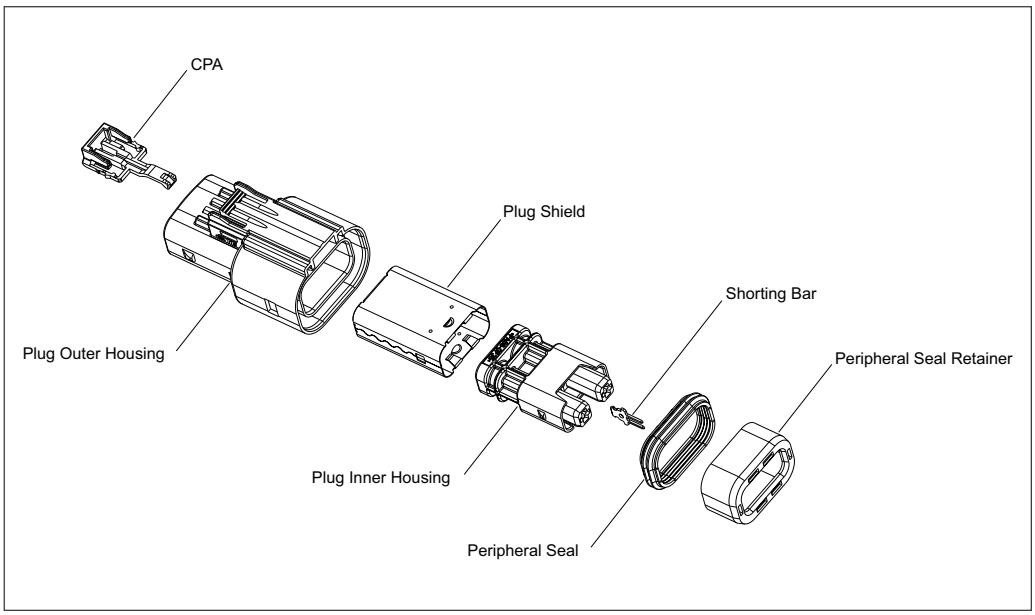

* Drawing number is NOT the order number!

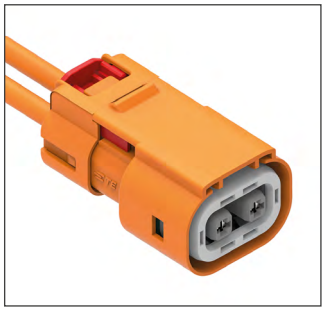

Applications

- DC / DC Converter
- HV Heater
- HV Climate Compressor
- On-Board Charger

Technical Features

Poles:
2

Terminal Size / System:
AMP MCP 2.8

Conductor Cross-Sections:
2.5 mm² to 4 mm²

Wire Type:
Single-core

Voltage Rating:
600 VDC

Temperature Range:
-40°C up to 125°C

Current Carrying Capability:
Derating factor of 10%
40 A at 85°C

IP Rating, Mated:
IP67, IP6K9K

IP Rating, Unmated:
IP2XB

HV Interlock Option:
Integrated, internal

Latch Access Type:
Finger and tool accessible

CPA:
Optional

Fire Classification:
HB

Vibration Level:
USCAR-2 Class V1

Shielding / Options:
Yes

EMC Shielding Resistance:
10 mΩ

Available Codings:
A, B, D, E, F, G

Product Specification:
108-2394

Application Specification:
114-13259

AMP+ HVA 280 2p hi XE – Plug

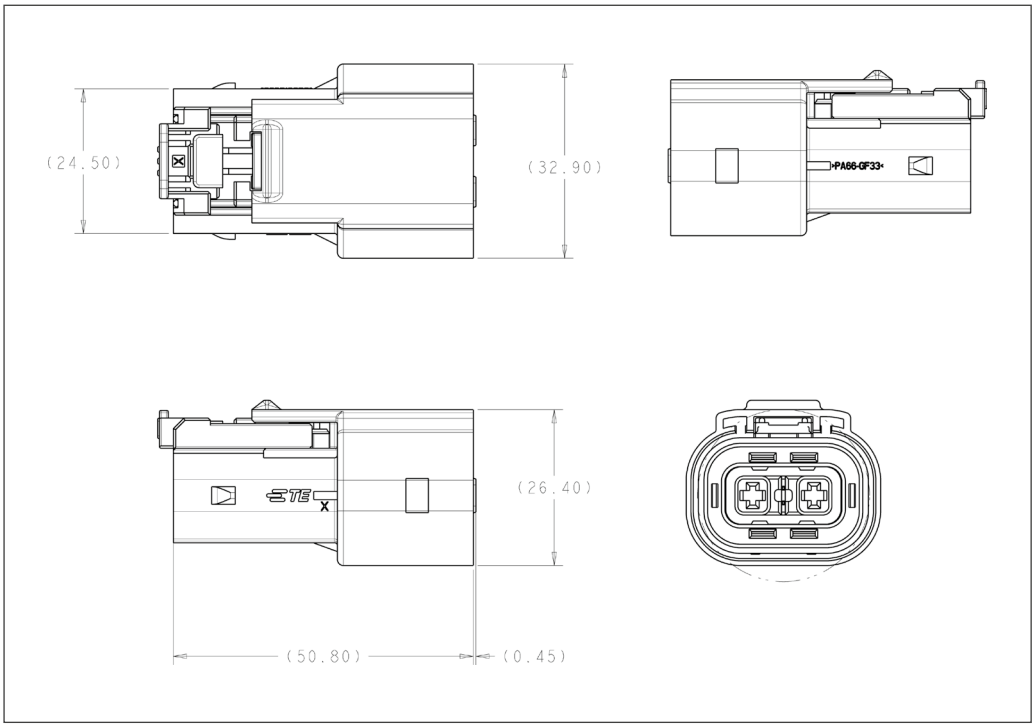

Drawing 2103176 *

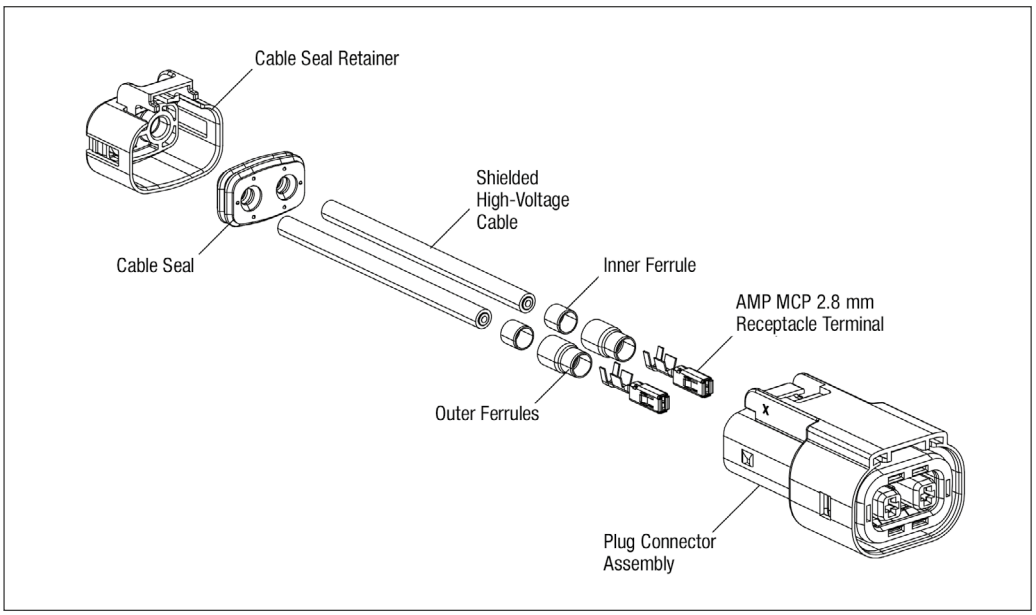

* Drawing number is NOT the order number!

Applications

- DC / DC Converter
- HV Heater
- HV Climate Compressor
- On-Board Charger

Technical Features

Poles:
2

Terminal Size / System:
AMP MCP 2.8

Conductor Cross-Sections:
2.5 mm² to 4 mm²

Wire Type:
Multi-core

Voltage Rating:
850 VDC

Temperature Range:
-40°C up to 140°C

Current Carrying Capability:
33 A at 85°C

IP Rating, Mated:
IP67, IP6K9K

IP Rating, Unmated:
IP2XB

HV Interlock Option:
Integrated, internal

Latch Access Type:
Finger and tool accessible

CPA:
Yes

Fire Classification:
HB

Vibration Level:
SG 2 (LV 215-1)

Shielding / Options:
Yes

EMC Shielding Resistance:
10 mΩ

Available Codings:
A, B, D, E, F

Product Specification:
108-32020

Application Specification:
114-13305

AMP+ HVA 280 2p hm – Shunted HVIL Plug

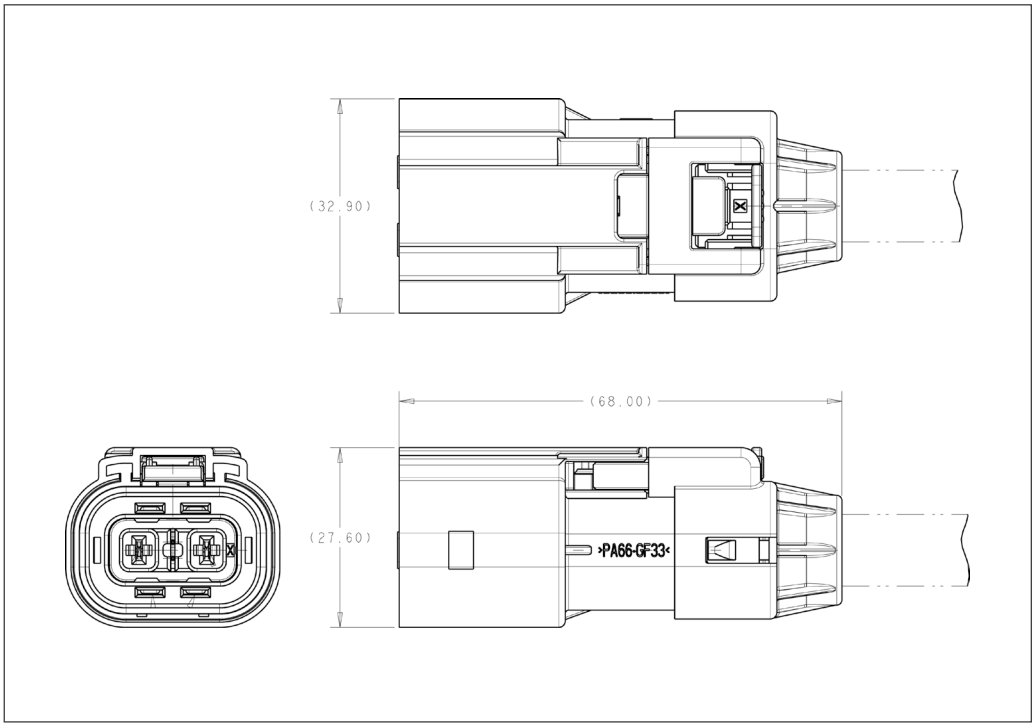

2103014 * (Shunted) and 2103437 * (Pass through)

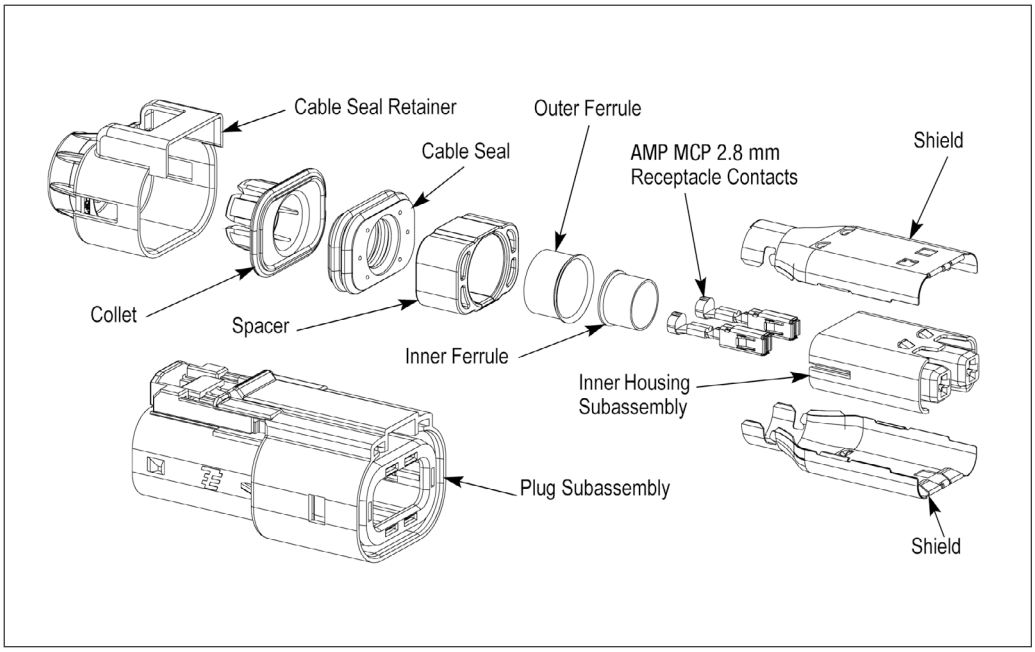

* Drawing number is NOT the order number!

Applications

- DC / DC Converter
- HV Heater
- HV Climate Compressor
- On-Board Charger

Technical Features

Poles:
2

Terminal Size / System:
AMP MCP 2.8

Conductor Cross-Sections:
2.5 mm^2 to 4 mm^2

Wire Type:
Multi-core

Voltage Rating:
850 VDC

Temperature Range:
-40°C up to 140°C

Current Carrying Capability:
33 A at 85°C

IP Rating, Mated:
IP67, IP6K9K

IP Rating, Unmated:
IP2XB

HV Interlock Option:
Integrated, internal

Latch Access Type:
Finger and tool accessible

CPA:
Yes

Fire Classification:
HB

Vibration Level:
SG 2 (LV 215-1)

Shielding / Options:
Yes

EMC Shielding Resistance:
10 mΩ

Available Codings:
A, B, D, E, F

Product Specification:
108-32020

Application Specification:
114-13310

AMP+ HVA 280 2p hm – Pass Through HVIL Plug

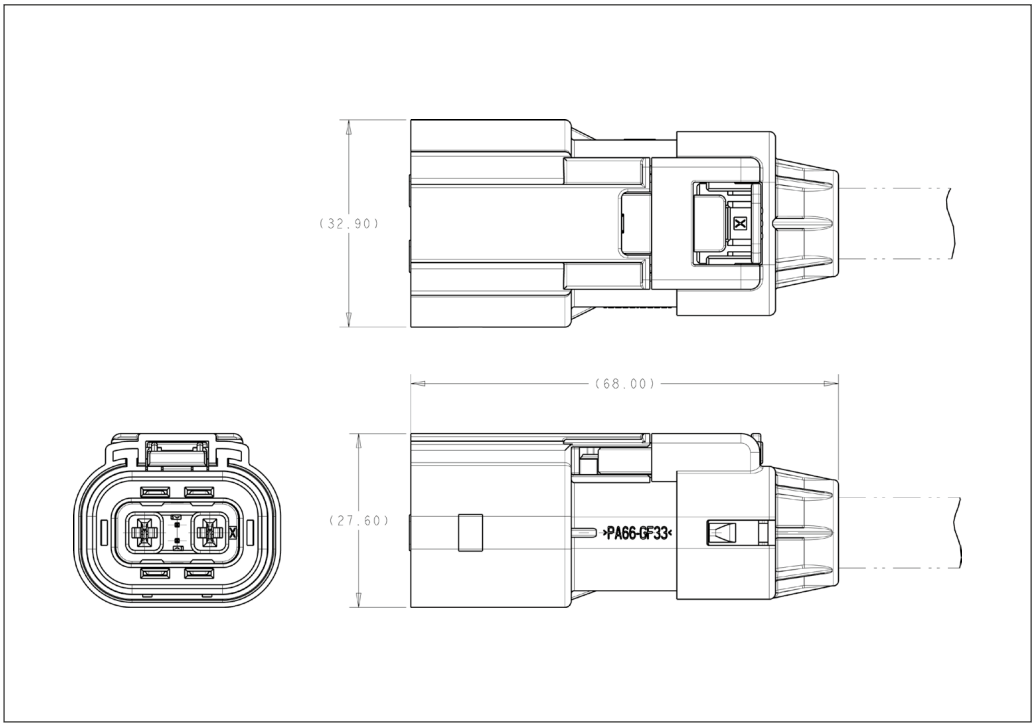

2103163 *(Pass through) and 2103436 * (Pass through)

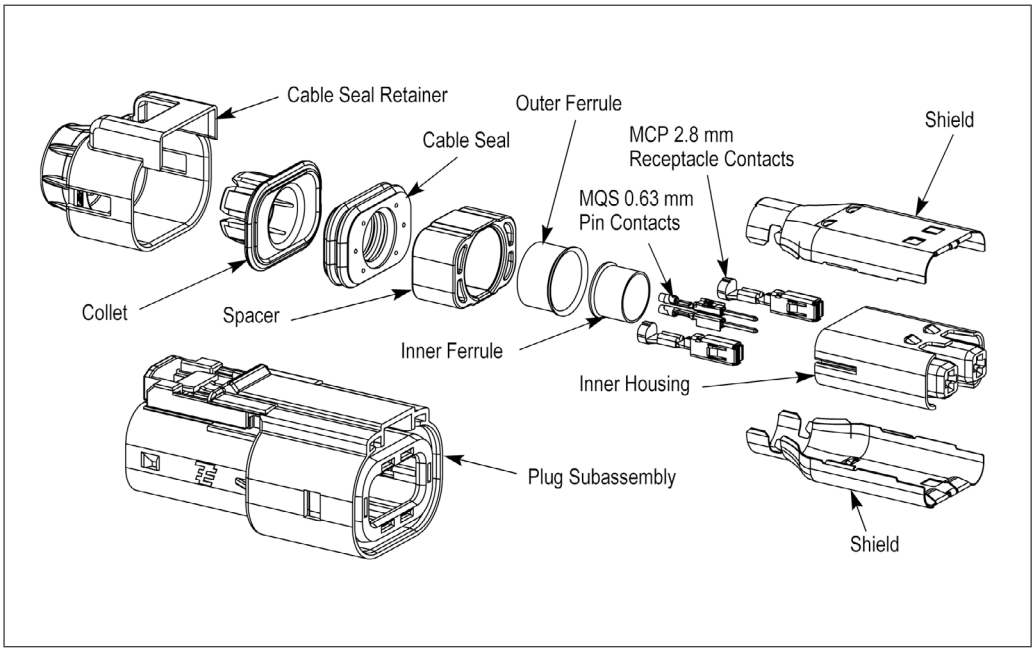

* Drawing number is NOT the order number!

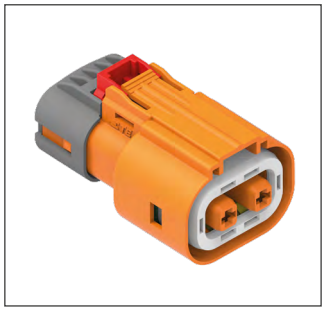

AMP+ HVA 280 2p hi SE – Intelligent Plug (Single Click)

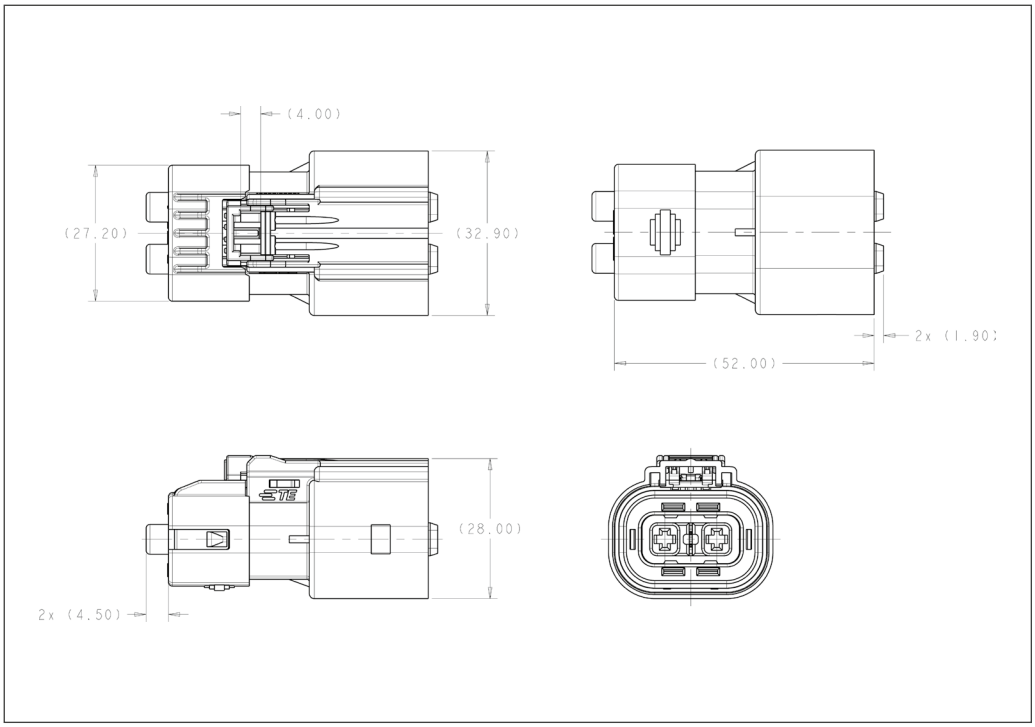

Drawing 2103744 *

Applications

- DC / DC Converter
- HV Heater
- HV Climate Compressor
- On-Board Charger

Technical Features

Poles:
2

Wire Type:
Single-core

Temperature Range:
-40°C up to 125°C

IP Rating, Mated:
IP67, IP6K9K

IP Rating, Unmated:
IP2XB

HV Interlock Option:
Integrated, internal

Latch Access Type:
Finger accessible

CPA:
Yes

Fire Classification:
HB

Vibration Level:
SG 2 (LV 215-1)

Shielding / Options:
Yes

EMC Shielding Resistance:
10 mΩ

Available Codings:
Z

Product Specification:
108-2394

Application Specification:
114-13259

* Drawing number is NOT the order number!

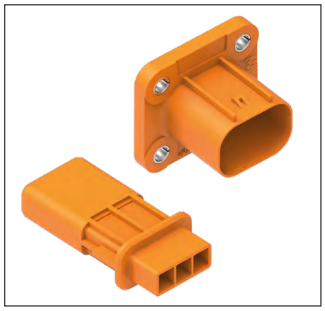

Applications

- DC / DC Converter
- HV Heater
- HV Climate Compressor
- On-Board Charger

Technical Features

Poles:
2 or 3

Tab Size:
2.8 mm

Voltage Rating:
up to 850 VDC
(depending on mating plug)

Temperature Range:
-40°C up to 140°C

Current Carrying Capability:
Derating factor of 10%
40 A at 85°C

IP Rating, Mated:
IP67, IP6K9K

IP Rating, Unmated:
IP2XB

HV Interlock Option:
Integrated, internal (only for 2p)

Fire Classification:
HB

Vibration Level:
SG 2 (LV 215-1)

Shielding / Options:
Yes

EMC Shielding Resistance:
10 mΩ

Available Codings:
A, B, D, E, F

Product Specification:
108-32045

Application Specification:
408-32095

AMP+ HVA 280 2p hi /3p xi – Discrete Header

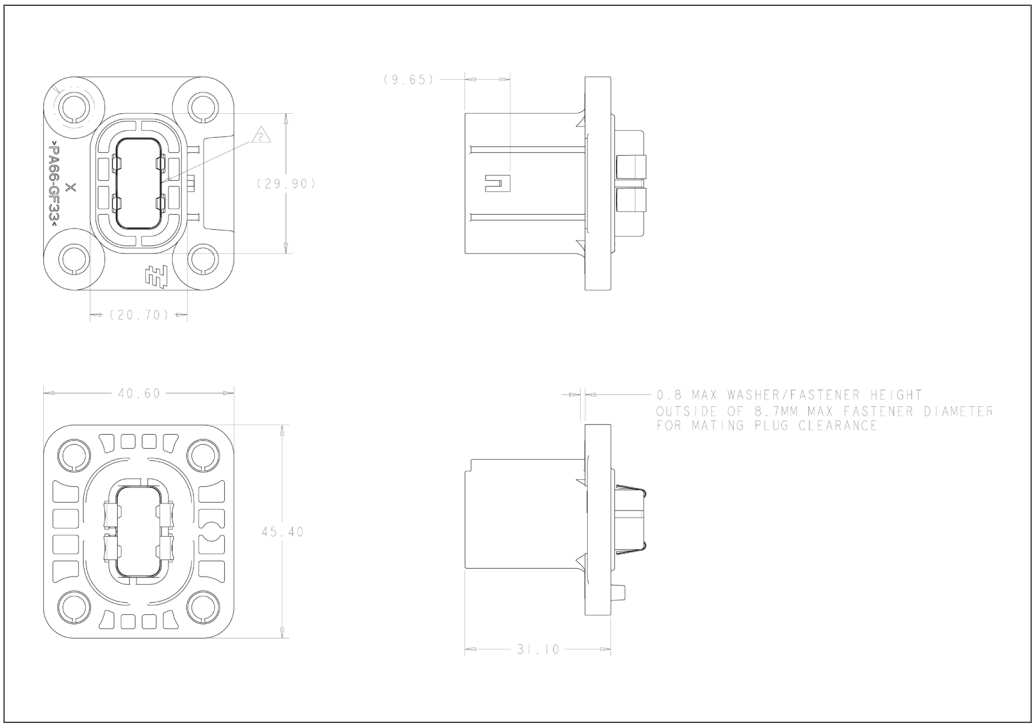

Drawing 2103247 * (2P), 2103321 * (3P)

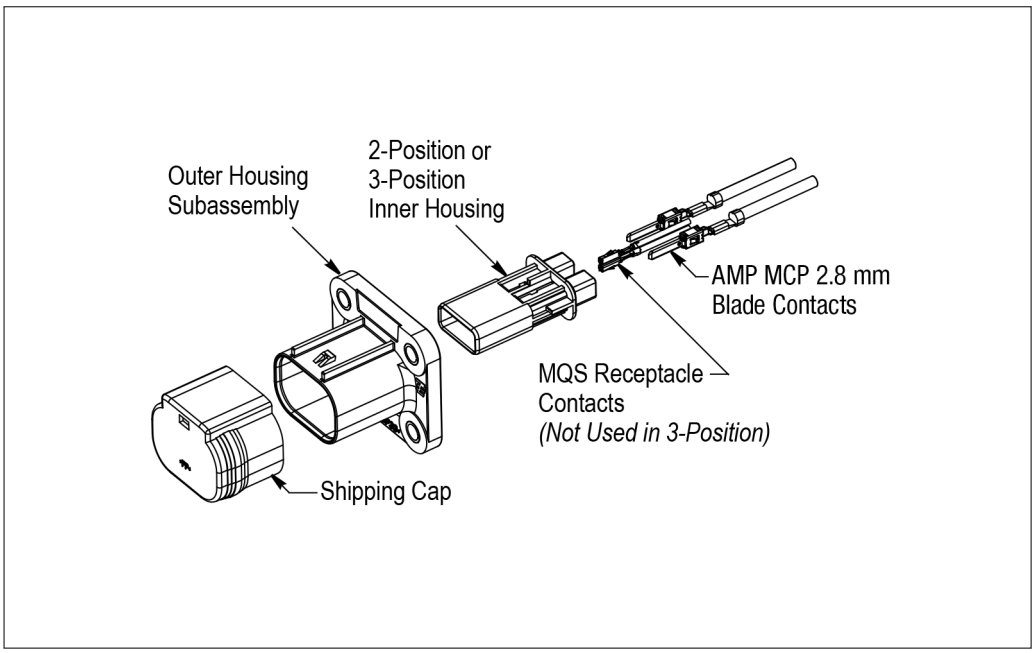

3P Inner Housing

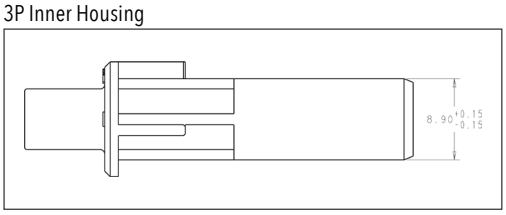

Drawing 2103321 *

2P Inner Housing

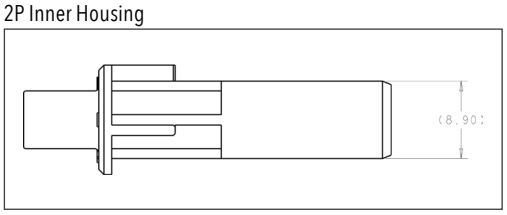

Drawing 2103245 *

Mating Plugs

2P Header: Page 19 – 23, 31, 32
3P Header: Page 29, 30

* Drawing number is NOT the order number!

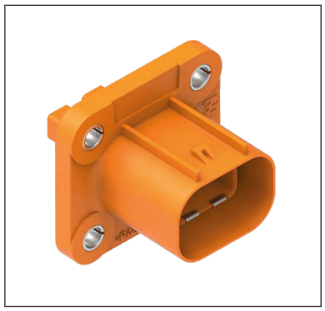

Applications

- DC / DC Converter
- HV Heater
- HV Climate Compressor
- On-Board Charger

Technical Features

Poles:
2

Tab Size:
2.8 mm

Voltage Rating:
up to 850 VDC
(depending on mating plug)

Temperature Range:
-40°C up to 140°C

Current Carrying Capability:
Derating factor of 10%
40 A at 85°C

IP Rating, Mated:
IP67, IP6K9K

IP Rating, Unmated:
IP2XB

HV Interlock Option:
Integrated, internal

Fire Classification:
HB

Vibration Level:
SG 2 (LV 215-1)

Shielding / Options:
Yes (Tin/Silver)

EMC Shielding Resistance:
10 mΩ

Available Codings:
A, B, D, E, F

Product Specification:
108-32020

Application Specification:
408-10441

AMP+ HVA 280 2p hx – 1 Piece Header

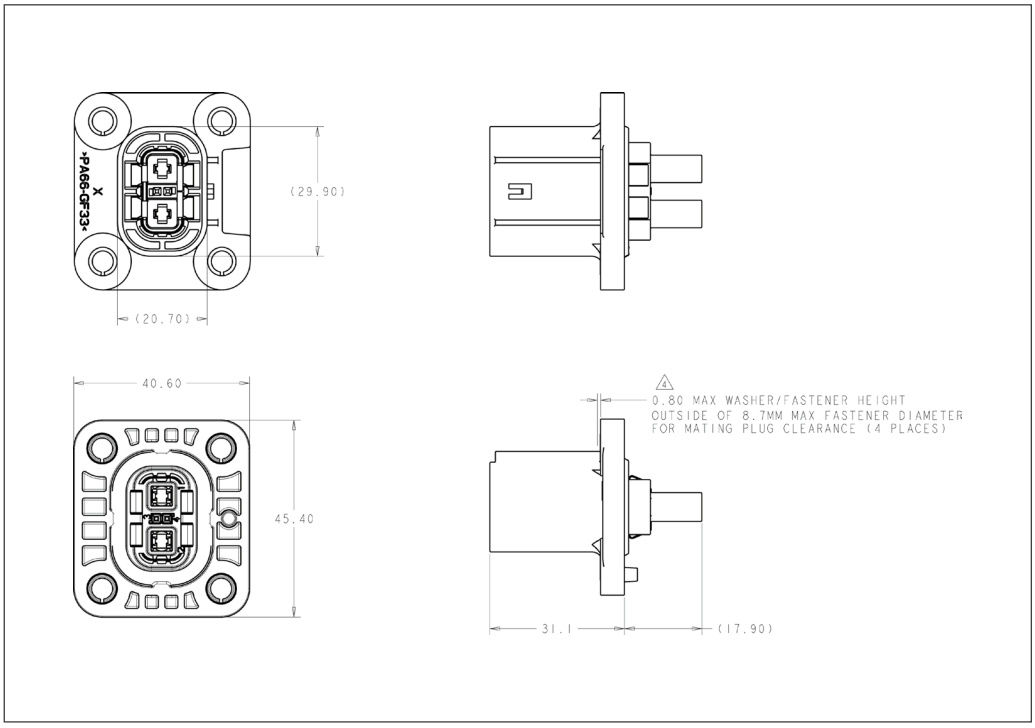

Drawing 2103124 *

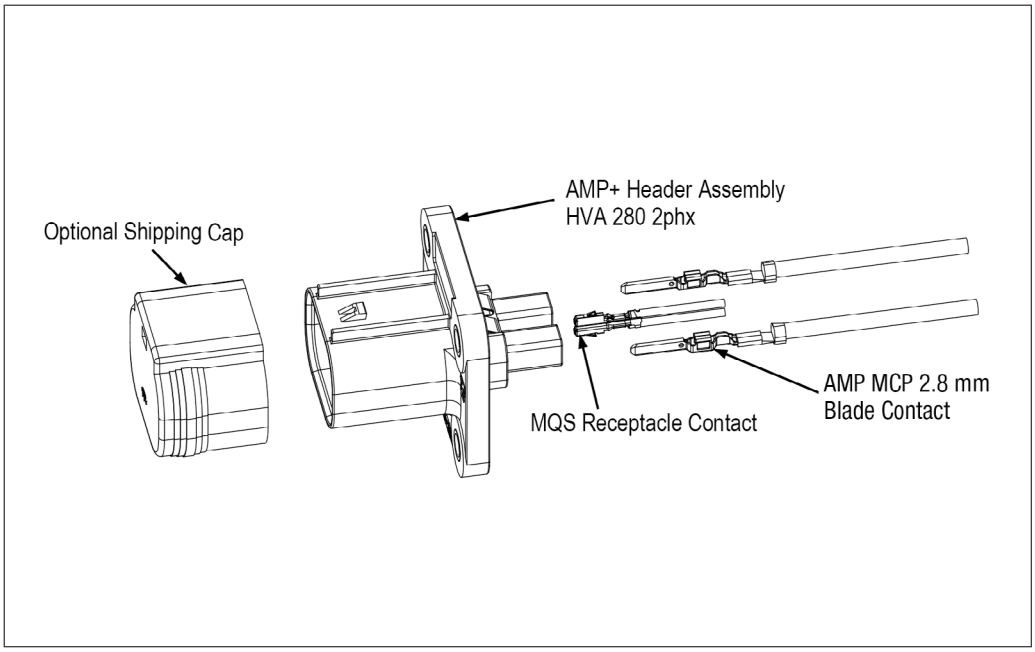

Mating Plugs

2P Header: Page 19 – 23, 31, 32
3P Header: Page 29, 30

* Drawing number is NOT the order number!

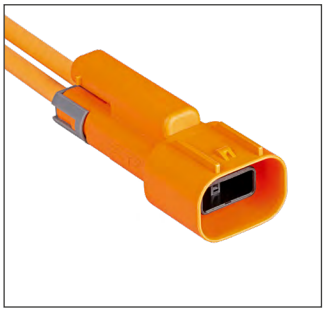

Applications

- DC / DC Converter
- HV Heater
- HV Climate Compressor
- On-Board Charger

Technical Features

Poles:
2

Terminal Size / System:
AMP MCP 2.8

Conductor Cross-Sections:
2.5 mm^2 to 4 mm^2

Wire Type:
Single-core

Voltage Rating:
600 VDC

Temperature Range:
-40°C up to 125°C

Current Carrying Capability:
Derating factor of 10%
40 A at 85°C

IP Rating, Mated:
IP67, IP6K9K

IP Rating, Unmated:
IP2XB

HV Interlock Option:
Integrated, external

Fire Classification:
HB

Vibration Level:
USCAR-2 Class V1

Shielding / Options:
Yes

EMC Shielding Resistance:
10 mΩ

Available Codings:
A, B, D, E, F

Product Specification:
In progress

Application Specification:
114-32033

AMP+ HVA 280 2p hi – Inline Cap

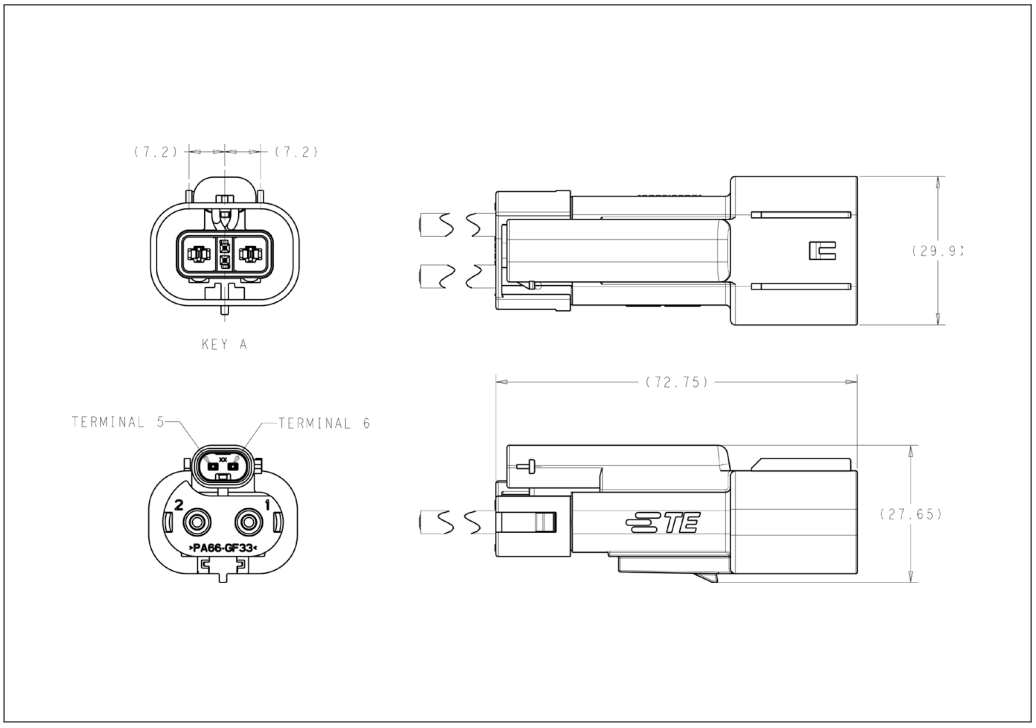

2103220 * (Pass through), 2103221 * (Pass through)

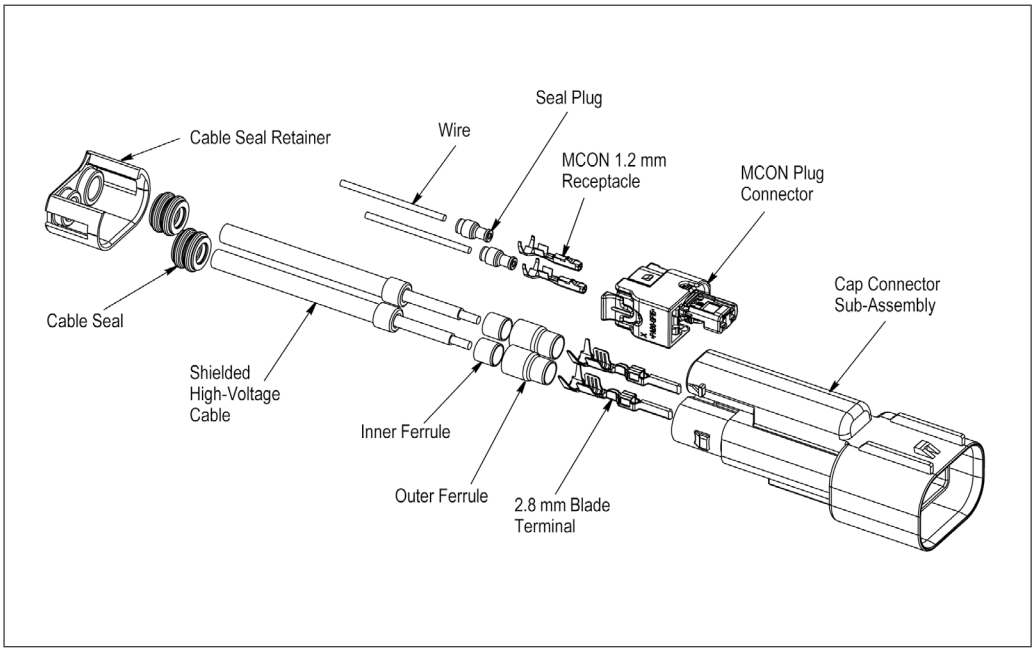

* Drawing number is NOT the order number!

Applications

- DC / DC Converter
- HV Heater
- HV Climate Compressor
- On-Board Charger

Technical Features

Poles:
2

Terminal Size / System:
AMP MCP 2.8

Conductor Cross-Sections:
2.5 mm^2 to 4 mm^2

Wire Type:
Multi-core

Voltage Rating:
up to 850 VDC

Temperature Range:
-40°C up to 140°C

Current Carrying Capability:
33 A at 85°C

IP Rating, Mated:
IP67, IP6K9K

IP Rating, Unmated:
IP2XB

HV Interlock Option:
Integrated, internal

Fire Classification:
HB

Vibration Level:
USCAR-2 Class V1

Shielding / Options:
Yes

EMC Shielding Resistance:
10 mΩ

Available Codings:
A, B, D, E, F

Application Specification:
114-32034

AMP+ HVA 280 2p hm – Inline Cap

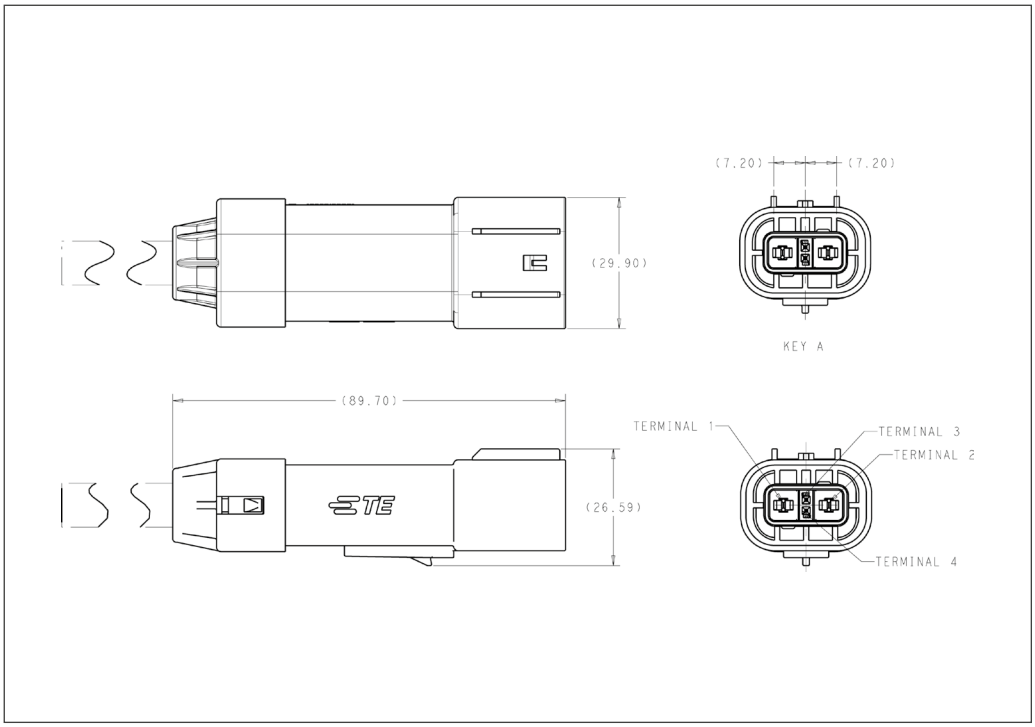

Drawing 2103219 *

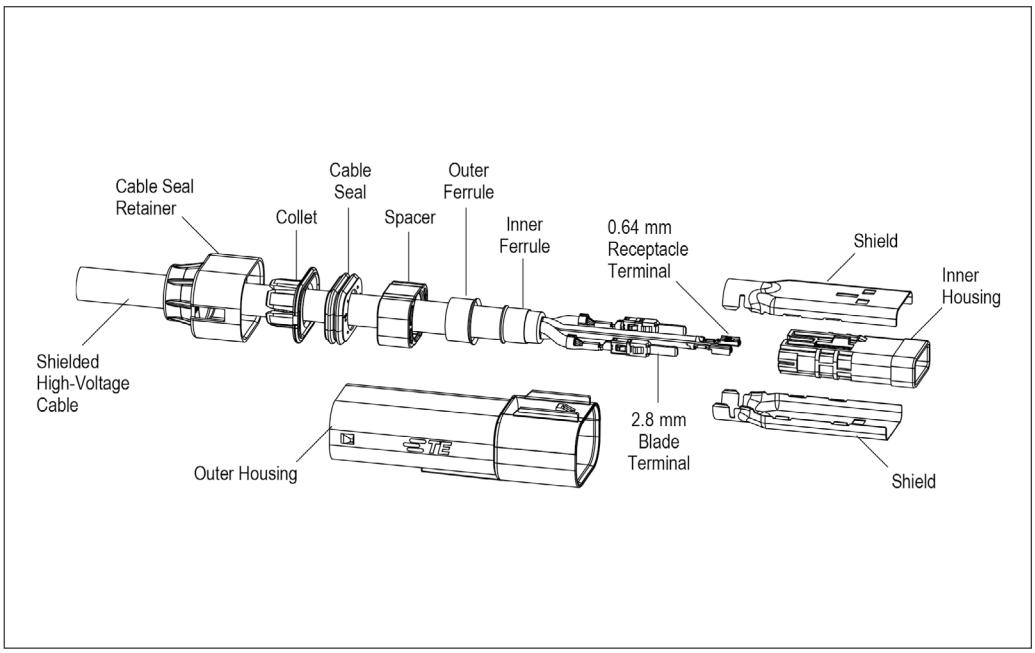

* Drawing number is NOT the order number!

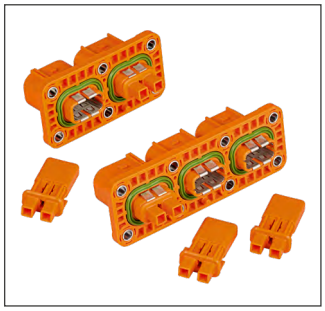

Applications

- DC / DC Converter
- HV Heater
- HV Climate Compressor
- On-Board Charger

Technical Features

Poles:
For 2-bay header 2x 2
or 6 (according to inner housing)
For 3-bay header 3x 2
or 9 (according to inner housing)

Tab Size:
2.8 mm

Conductor Cross-Sections:
4.0 mm^2

Wire Type:
Single-core

Voltage Rating:
up to 850 VDC
(depending on mating plug)

Temperature Range:
-40°C up to 125°C

Current Carrying Capability:
Derating factor of 10%
up to 40 A at 85°C
(depending on mating plug)

IP Rating, Mated:
IP67, IP6K9K

IP Rating, Unmated:
IP2XB

HV Interlock Option:
Integrated, internal (only for 2p)

Fire Classification:
HB

Vibration Level:
USCAR-2 Class V1

Shielding / Options:
Yes

EMC Shielding Resistance:
10 mΩ

Available Codings:
For 2-bay header option 1 A, E;
option 2 D, F
For 3-bay header A, D, E

Inner Housing:
For 2 positions 2103245-X
For 3 positions 2103321-X

Mating Plugs

2P Header: Page 19 to 23, 31, 32
3P Header: Page 29, 30

AMP+ HVA 280 2p hi / 3p xi – Multi-Bay Discrete Header

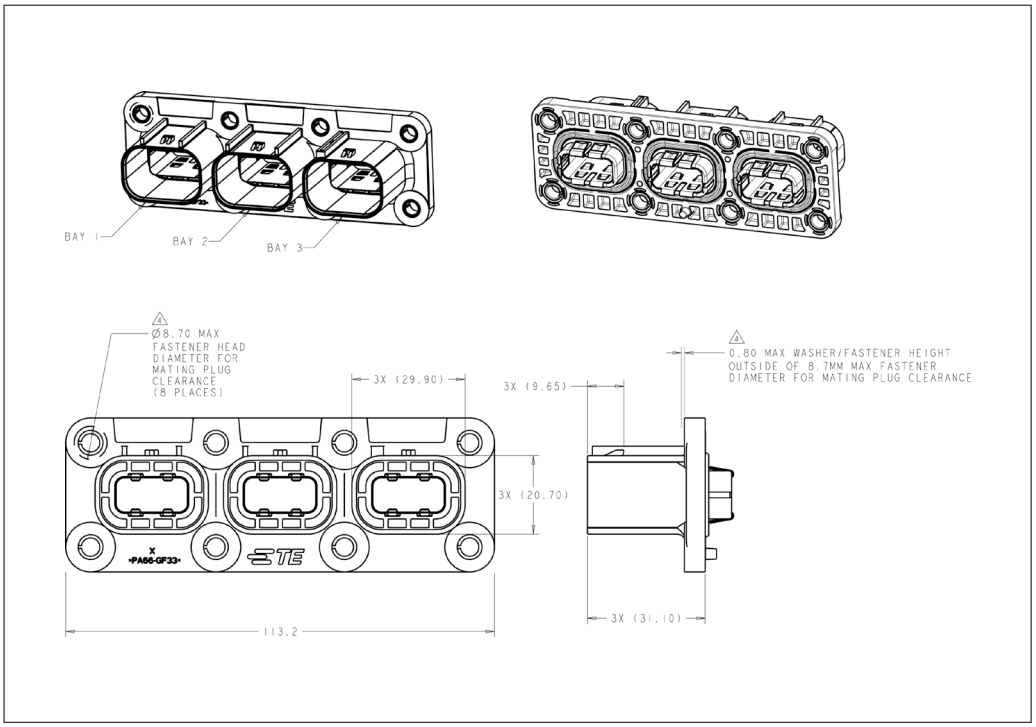

Drawing 2103340 *

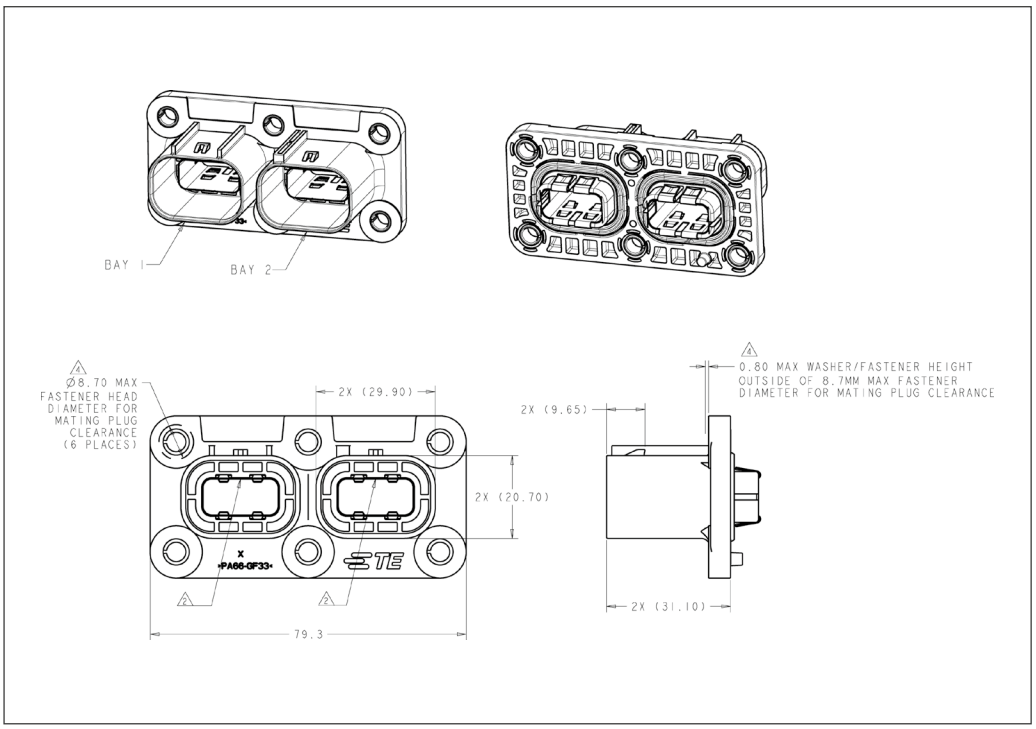

Drawing 2103346 *

* Drawing number is NOT the order number!

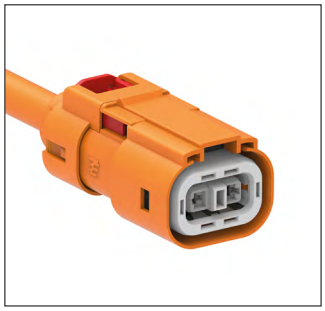

Applications

- DC / DC Converter
- HV Heater
- HV Climate Compressor
- On-Board Charger

Technical Features

Poles:
3

Terminal Size / System:
AMP MCP 2.8

Conductor Cross-Sections:
2.5 mm² to 4 mm²

Wire Type:
Multi-core

Voltage Rating:
850 VDC

Temperature Range:
-40°C up to 140°C

Current Carrying Capability:
24 A at 85°C

IP Rating, Mated:
IP67, IP6K9K

IP Rating, Unmated:
IP2XB

Fire Classification:
HB

Vibration Level:
USCAR-2 Class V1

Shielding / Options:
Yes

EMC Shielding Resistance:
10 mΩ

Available Codings:
A, B, D, E, F and AK severity 2 (body-sealed)

Product Specification:
108-32020

Application Specification:
114-32056

AMP+ HVA 280 3p xm XE – Plug

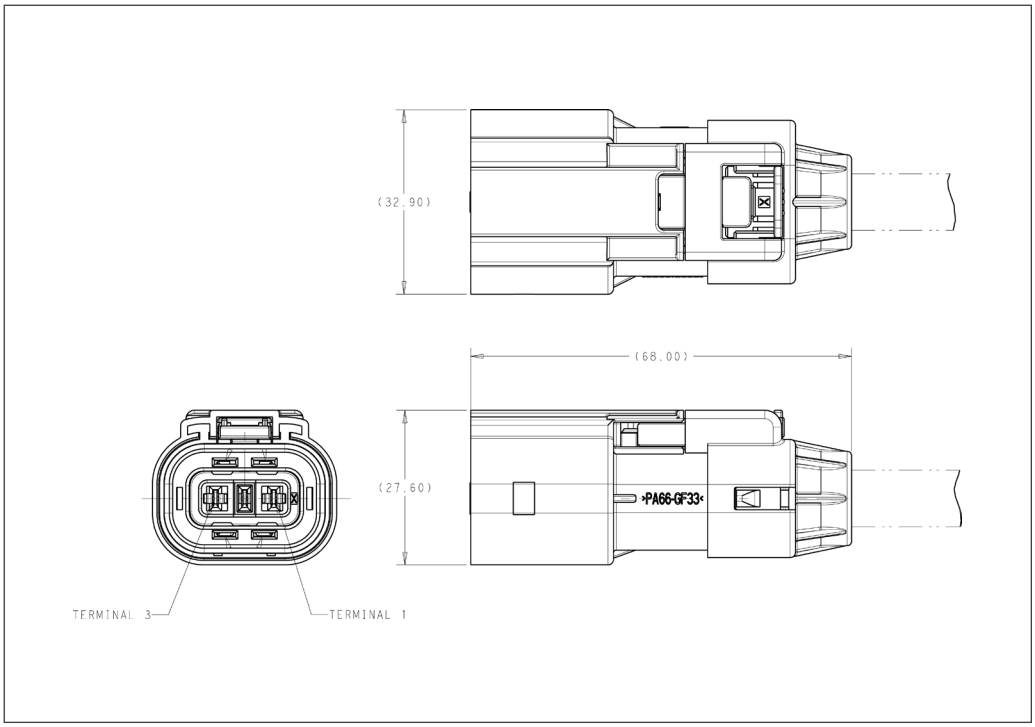

Drawing 2103309 *

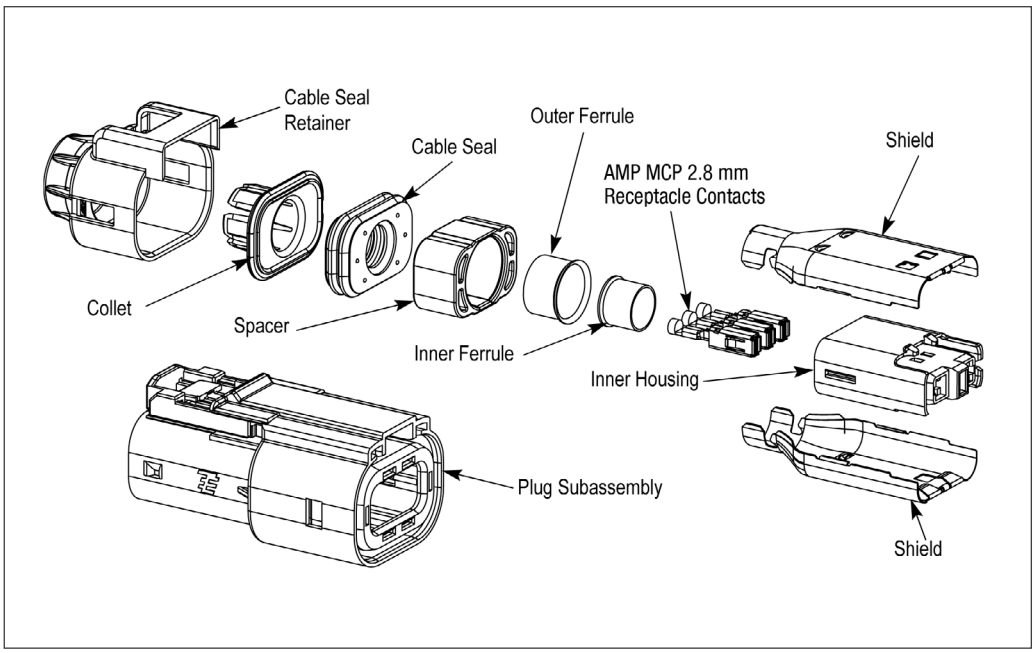

* Drawing number is NOT the order number!

Applications

- DC / DC Converter
- HV Heater
- HV Climate Compressor
- On-Board Charger

Technical Features

Poles:
3

Terminal Size / System:
AMP MCP 2.8

Conductor Cross-Sections:
2.5 mm² to 4 mm²

Wire Type:
Multi-core

Voltage Rating:
850 VDC

Temperature Range:
-40°C up to 140°C

Current Carrying Capability:
24 A at 85°C

IP Rating, Mated:
IP67, IP6K9K

IP Rating, Unmated:
IP2XB

Fire Classification:
HB

Vibration Level:
USCAR-2 Class V1

Shielding / Options:
Yes

EMC Shielding Resistance:
10 mΩ

Available Codings:
A, B, D, E, F

Product Specification:
108-32077

Application Specification:
114-32125

AMP+ HVA 280 3p xm XE – Plug (Single Click)

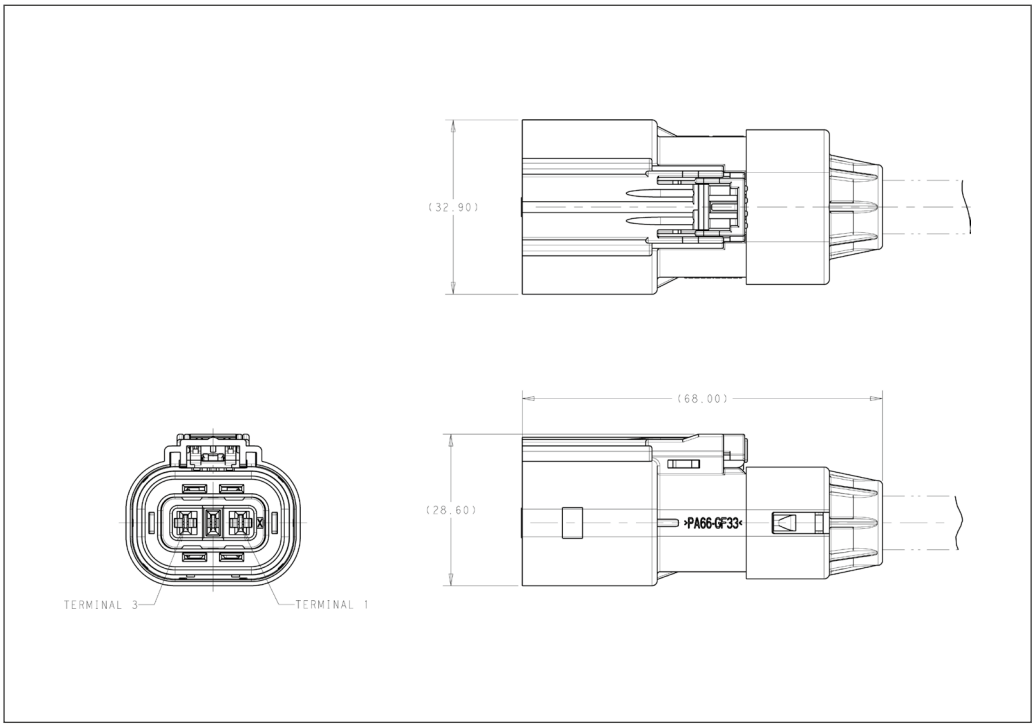

Drawing 2103533 *

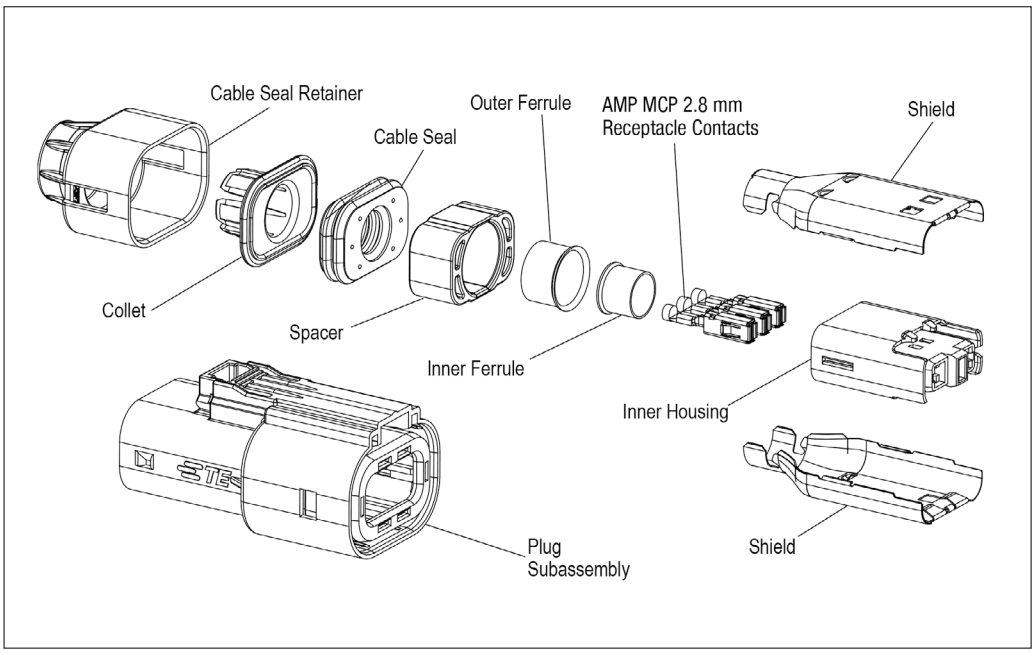

* Drawing number is NOT the order number!

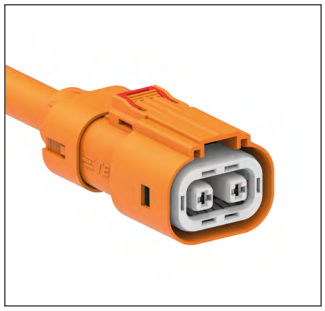

Applications

- DC / DC Converter
- HV Heater
- HV Climate Compressor
- On-Board Charger

Technical Features

Poles:
2

Terminal Size / System:
AMP MCP 2.8

Conductor Cross-Sections:
2.5 mm² to 4 mm²

Wire Type:
Multi-core

Voltage Rating:
850 VDC

Temperature Range:
-40°C up to 140°C

Current Carrying Capability:
33 A at 85°C

IP Rating, Mated:
IP67, IP6K9K

IP Rating, Unmated:
IP2XB

HV Interlock Option:
Integrated, internal

Fire Classification:
HB

Vibration Level:
USCAR-2 Class V1, SG 2 (LV 215-1)

Shielding / Options:
Yes

EMC Shielding Resistance:
10 mΩ

Available Codings:
A, B, D, E, F

Product Specification:
108-32077

Application Specification:
114-32124

AMP+ HVA 280 2p hm – Pass-Through Plug (Single Click)

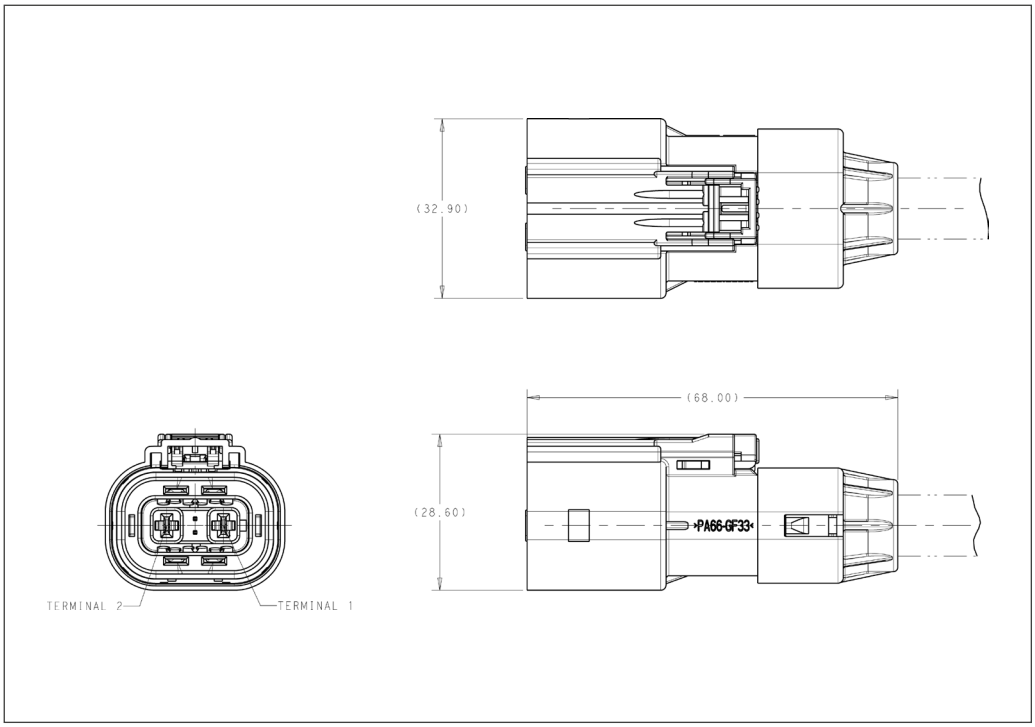

Drawing 2103531 *

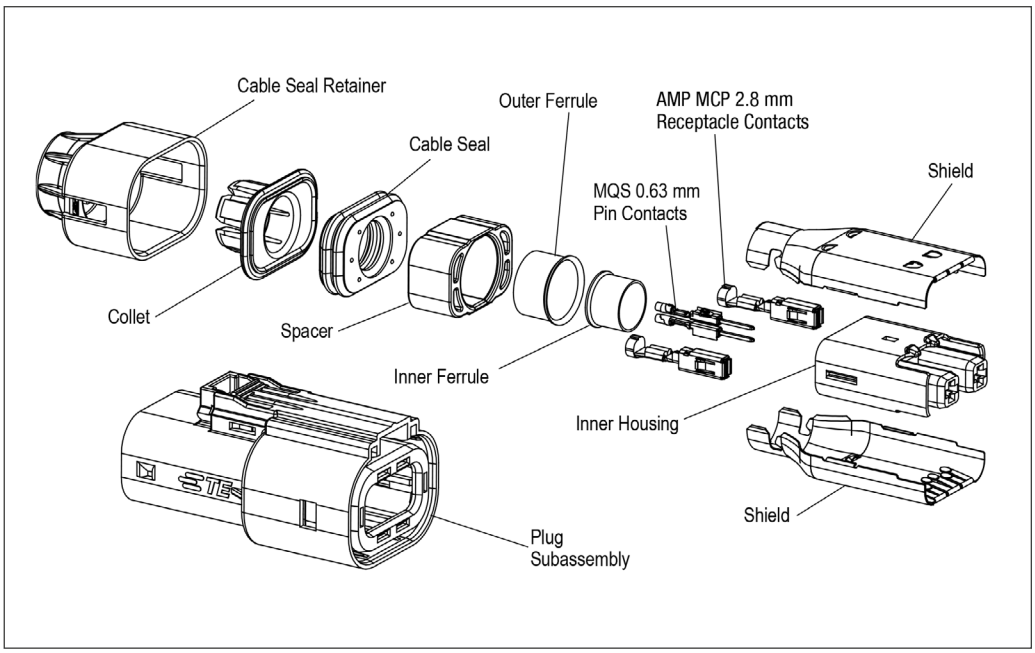

* Drawing number is NOT the order number!

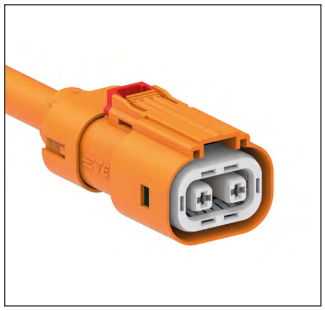

Applications

- DC / DC Converter
- HV Heater
- HV Climate Compressor
- On-Board Charger

Technical Features

Poles:
2

Terminal Size / System:
AMP MCP 2.8

Conductor Cross-Sections:
2.5 mm² to 4 mm²

Wire Type:
Multi-core

Voltage Rating:
850 VDC

Temperature Range:
-40°C up to 140°C

Current Carrying Capability:
33 A at 85°C

IP Rating, Mated:
IP67, IP6K9K

IP Rating, Unmated:
IP2XB

HV Interlock Option:
Integrated, internal

Fire Classification:
HB

Vibration Level:
USCAR-2 Class V1, SG 2 (LV 215-1)

Shielding / Options:
Yes

EMC Shielding Resistance:
10 mΩ

Available Codings:
A, B, D, E, F

Product Specification:
108-32077

Application Specification:
114-32123

AMP+ HVA 280 2p hm – Shunted Plug (Single Click)

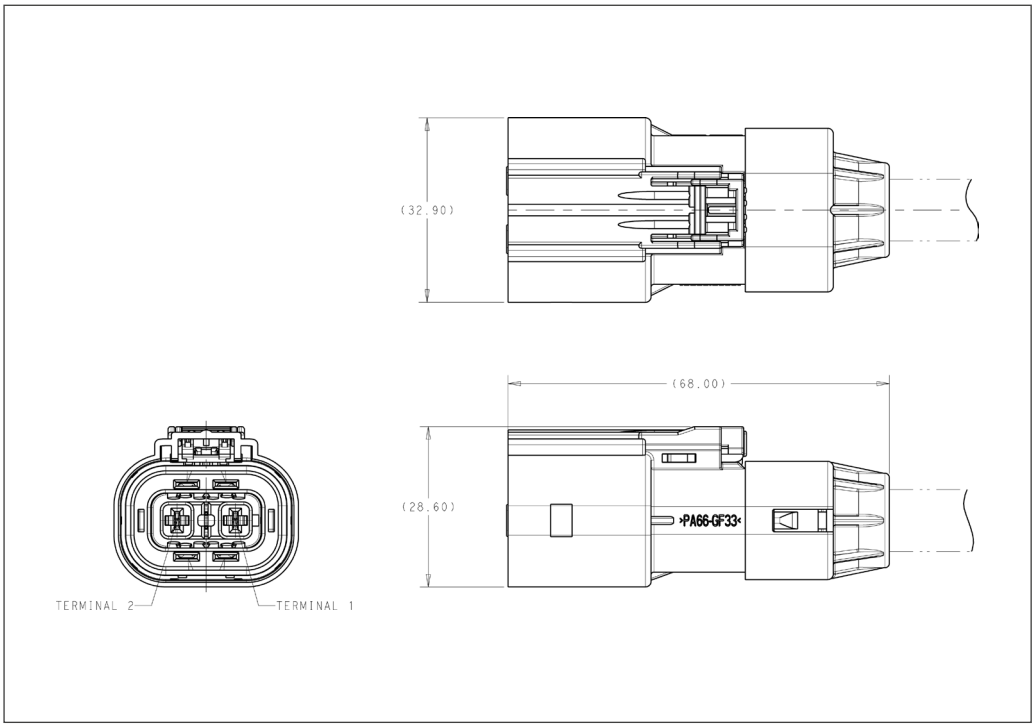

Drawing 2103532 *

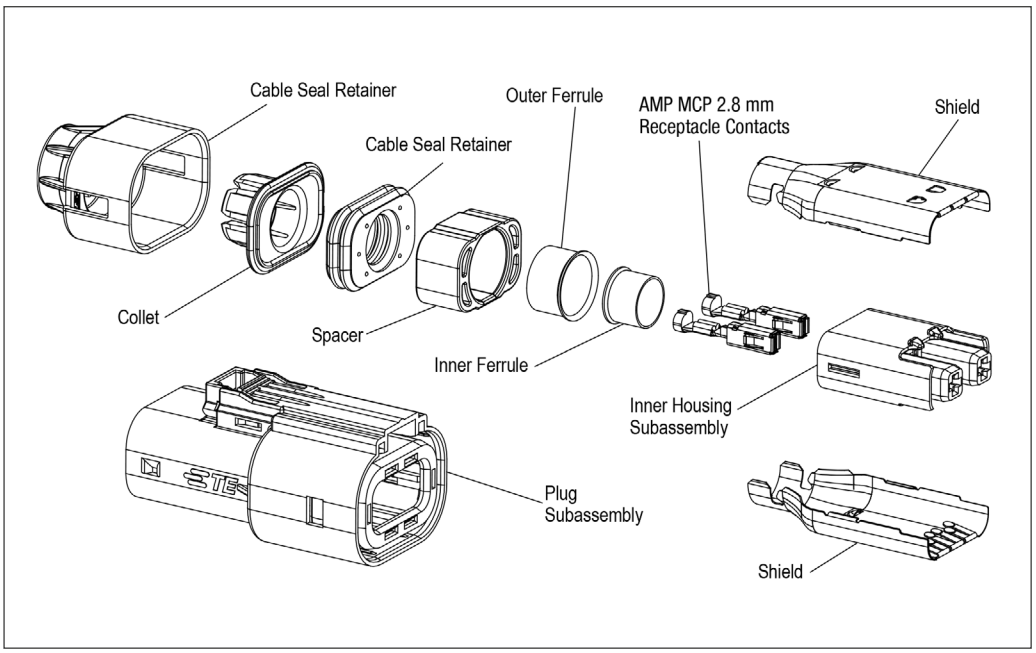

* Drawing number is NOT the order number!

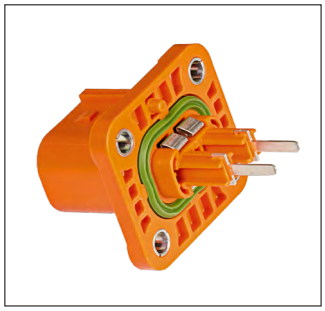

AMP+ HVA 280 2p – Header (Stitched)

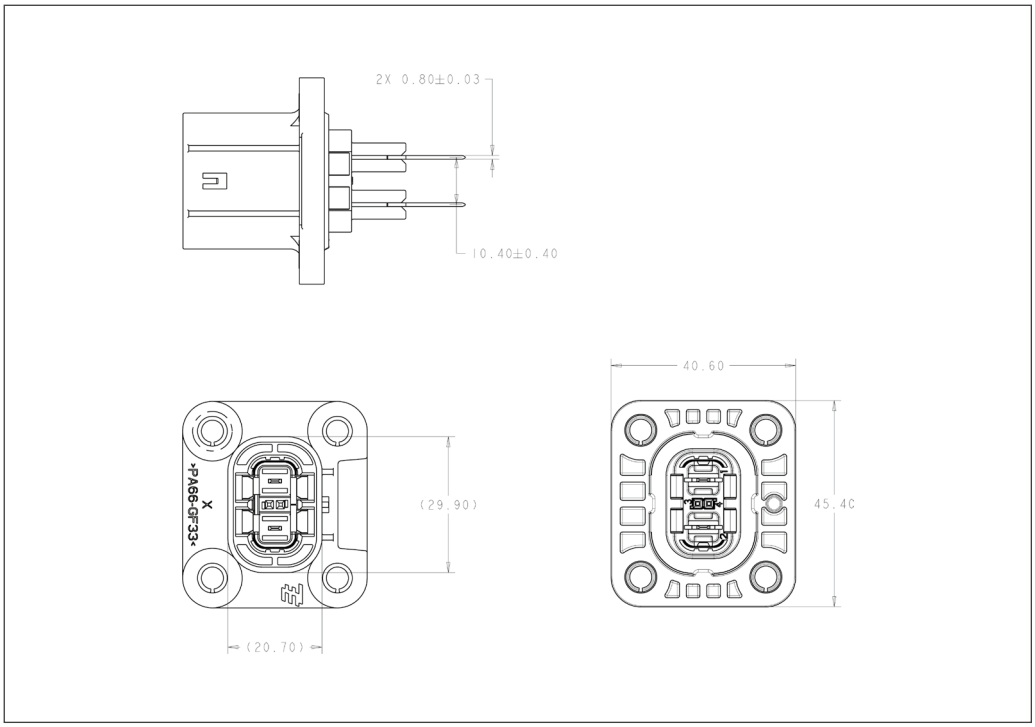

Drawing 2103396 *

Applications

- DC / DC Converter
- HV Heater
- HV Climate Compressor
- On-Board Charger

Technical Features

Poles:
2

Terminal Size / System:
AMP MCP 2.8

Tab Size:
2.8 mm

Wire Type:
Single-core

Tab Size:
0.8 x 2.8 mm

Voltage Rating:
Derating factor of 10%
40 A at 85°C
(depending on mating plug)

Temperature Range:
-40°C up to 140°C

Current Carrying Capability:
40 A at 85°C

IP Rating, Mated:
IP67, IP6K9K

IP Rating, Unmated:
IP2XB

HV Interlock Option:
Integrated, internal

Fire Classification:
HB

Vibration Level:
USCAR-2 Class V1

Shielding / Options:
Yes

EMC Shielding Resistance:
10 mΩ

Available Codings:
A, B, D, E, F

Application Specification:
408-10441

Mating Plugs

2P Header: Page 19 to 23, 31, 32
3P Header: Page 29, 30

* Drawing number is NOT the order number!

Applications

- DC / DC Converter
- HV Heater
- HV Climate Compressor
- On-Board Charger

AMP+ HVA 280 – Shipping Caps

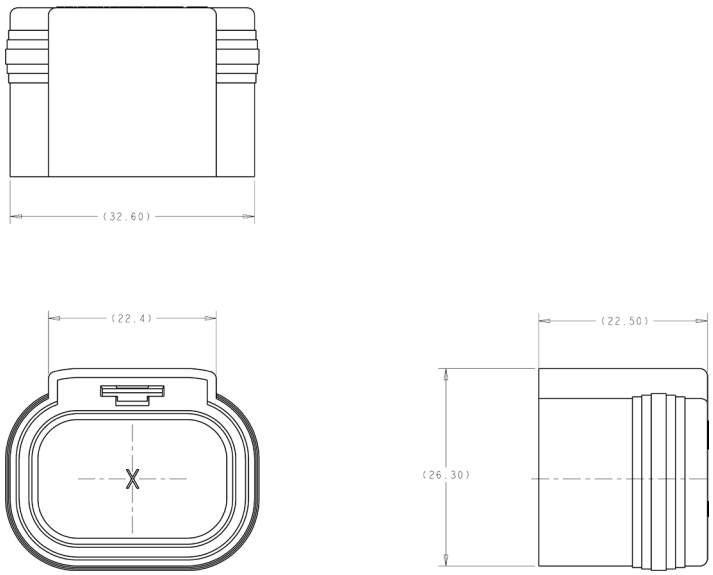

Drawing 1587733 *
Shipping caps fit TE standard headers

* Drawing number is NOT the order number!

AMP+ HVA 280 Connector System Kits

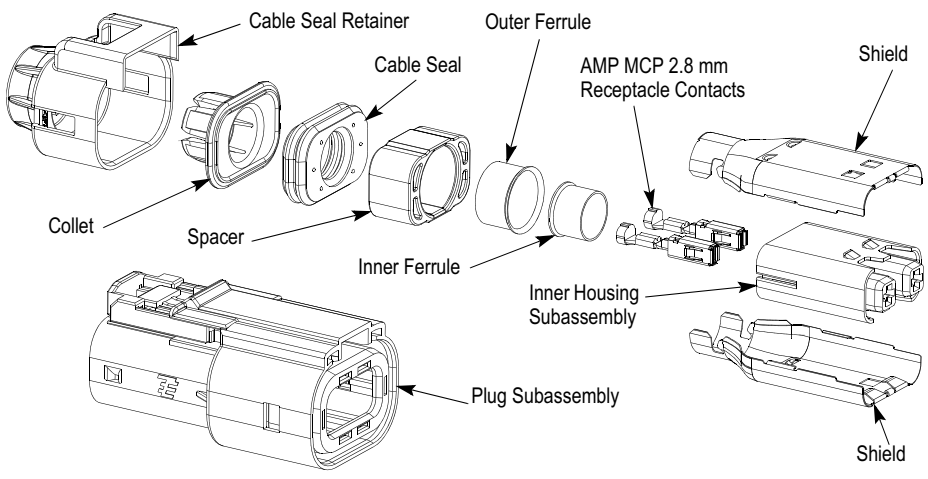

Example: Kit Number YHV280-2pm-s-4mm-A

AMP+ HVA 280 Connector System Kits *)

Connector	Position	Cable (mm^2)	Cable Type	HVIL Type	Key	LADD Connector Kit Number	Mating Header Part Number	LADD Header Kit Number
HVA 280	2	4	Individually shielded cable	Shunted HVIL	A	YHVA280-2phi-4mm-A	2103124-1	YHVA280-2phx-hdr-A
					B	YHVA280-2phi-4mm-B	2103124-2	YHVA280-2phx-hdr-B
			Multicore cable	Shunted HVIL	A	YHV280-2pm-s-4mm-A	2103124-1	YHVA280-2phx-hdr-A
					B	YHV280-2pm-s-4mm-B	2103124-2	YHVA280-2phx-hdr-B
					D	YHV280-2pm-s-4mm-D	2103124-4	YHVA280-2phx-hdr-D
					E	YHV280-2pm-s-4mm-E	2103124-5	YHVA280-2phx-hdr-E
				Pass-thru HVIL	A	YHV280-2pm-p-4mm-A	2103124-1	YHVA280-2phx-hdr-A
					B	YHV280-2pm-p-4mm-B	2103124-2	YHVA280-2phx-hdr-B
					D	YHV280-2pm-p-4mm-D	2103124-4	YHVA280-2phx-hdr-D
					E	YHV280-2pm-p-4mm-E	2103124-5	YHVA280-2phx-hdr-E
	3	2.5	Multicore cable	No HVIL	A	YHVA280-3pxm-A-000	Outer housing: 2103247-1 Inner housing: 2103321-1	YHVA280-3phx-hdr-A
					B	YHVA280-3pxm-B-000	Outer housing: 2103247-2 Inner housing: 2103321-2	YHVA280-3phx-hdr-B

*) Kits include HVIL terminals

NOTES

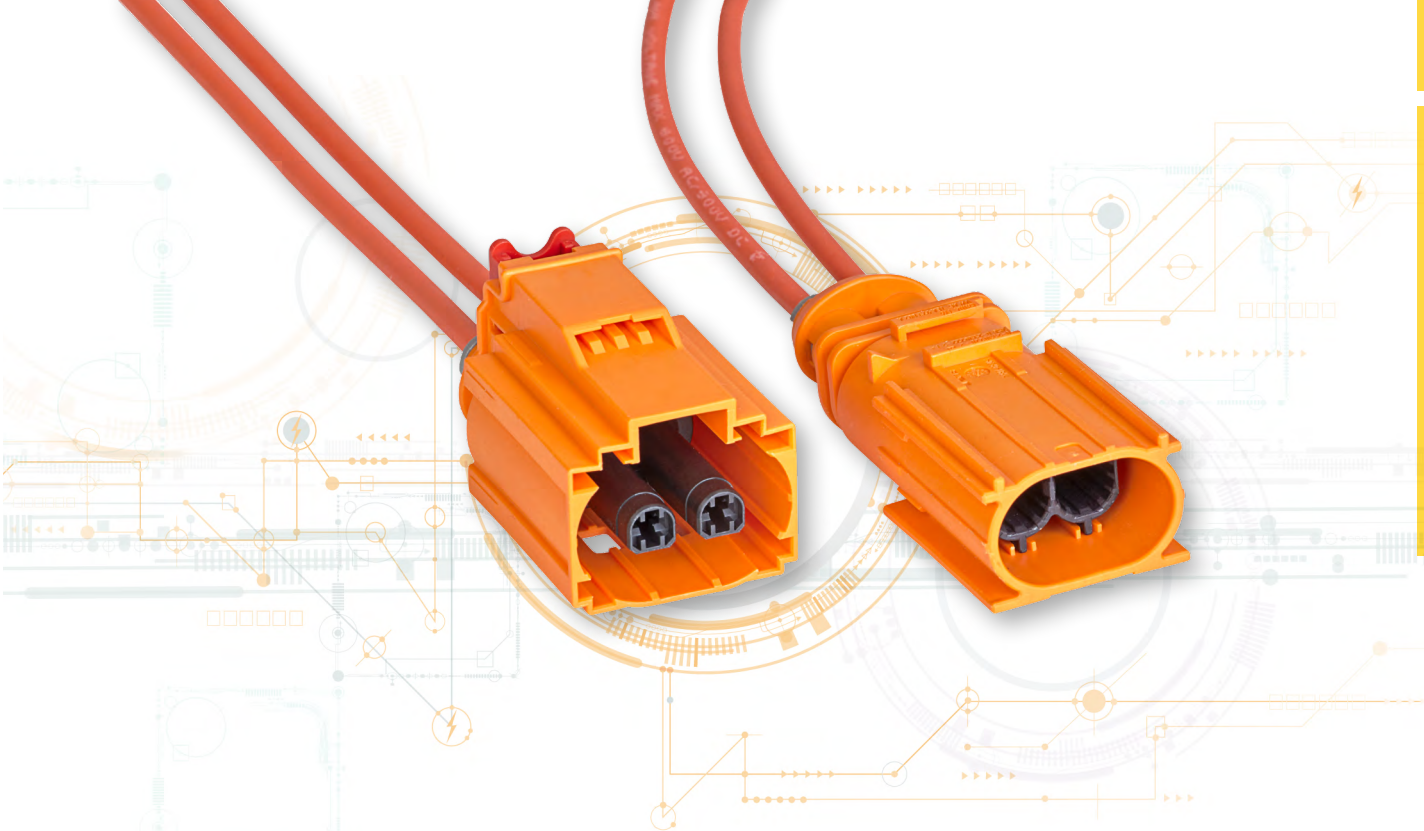

AMP+ HVU 280 HV UNSHIELDED INTERCONNECTION SYSTEM INTRODUCTION

In addition to the shielded versions in the respective current classes unshielded HV interconnection systems now complete the HV interconnection systems portfolio. In class 1, the AMP+ HVU 280 HV interconnection system is available as finger-proof, touch-safe two-pole system.

The HVU 280 connector system features improved packaging and manufacturing efficiency. In addition, the connector isolation ensures finger protection according to UL standard. For the header V0 flame resistant isolation material was used.

Applications include DC/DC converter, on-board charger, electric heater and electric climate compressor. The unshielded HVU 280 is a high-performing and very flexible class 1 interconnection system using our proven AMP MCP 2.8 terminal.

Naming Convention
HVU 280 Interconnection System

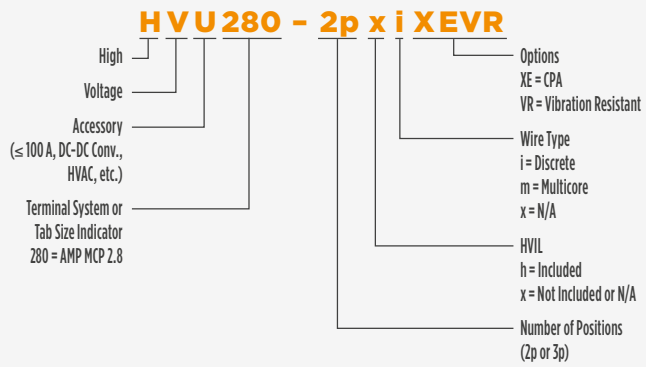

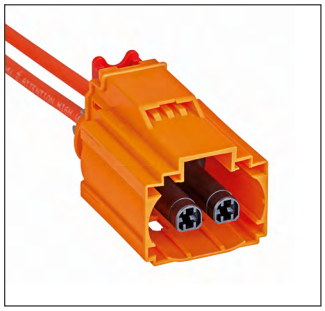

Applications

- DC / DC Converter
- HV Heater
- HV Climate Compressor
- On-Board Charger

Technical Features

Poles:
2

Terminal Size / System:
AMP MCP 2.8

Conductor Cross-Sections:
2.5 mm² to 4 mm²

Wire Type:
Single-core

Voltage Rating:
1,000 VDC

Temperature Range:
-40°C up to 140°C

Current Carrying Capability:
30 A at 85°C (4 mm²)

IP Rating, Mated:
IP67, IP6K9K, ISO 20653: IP2XD

IP Rating, Unmated:
IPXXB+ (UL finger + 2 mm / 30 N)

HV Interlock Option:

Latch Access Type:
Tool accessible

CPA:
Yes

Fire Classification:
HB

Vibration Level:
SG 3 (LV 215-1)

Shielding / Options:
N/A

EMC Shielding Resistance:
N/A

Available Codings:
A, B, D, E, F

Product Specification:
108-94679

Application Specification:
114-94554

AMP+ HVU 280 2p xi XE – Plug

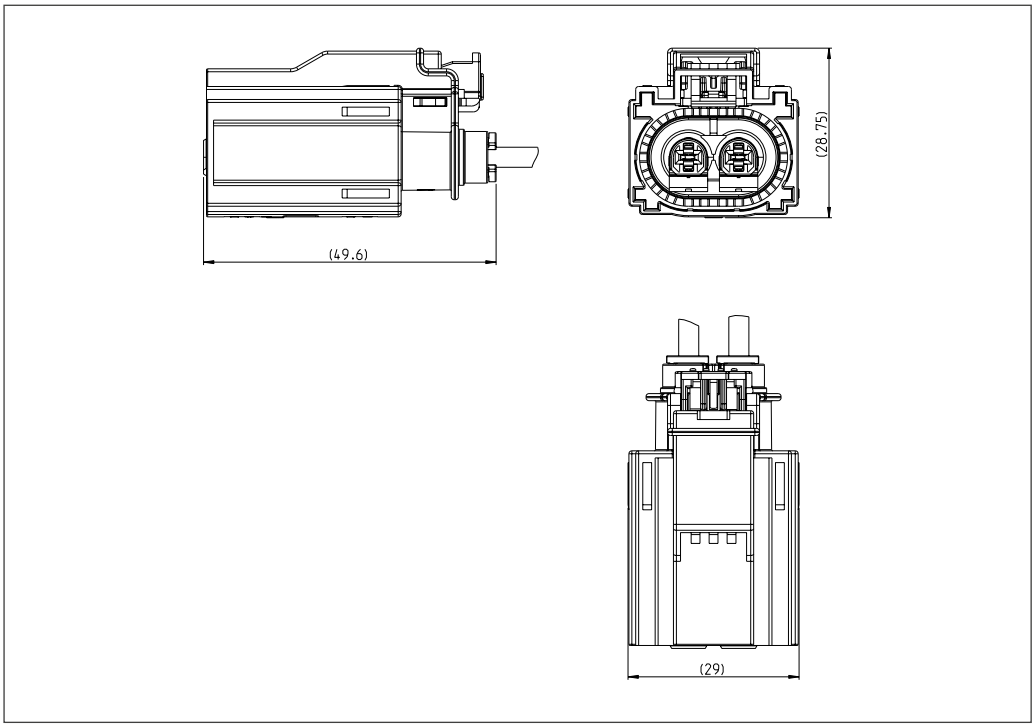

Drawing 2322438 *

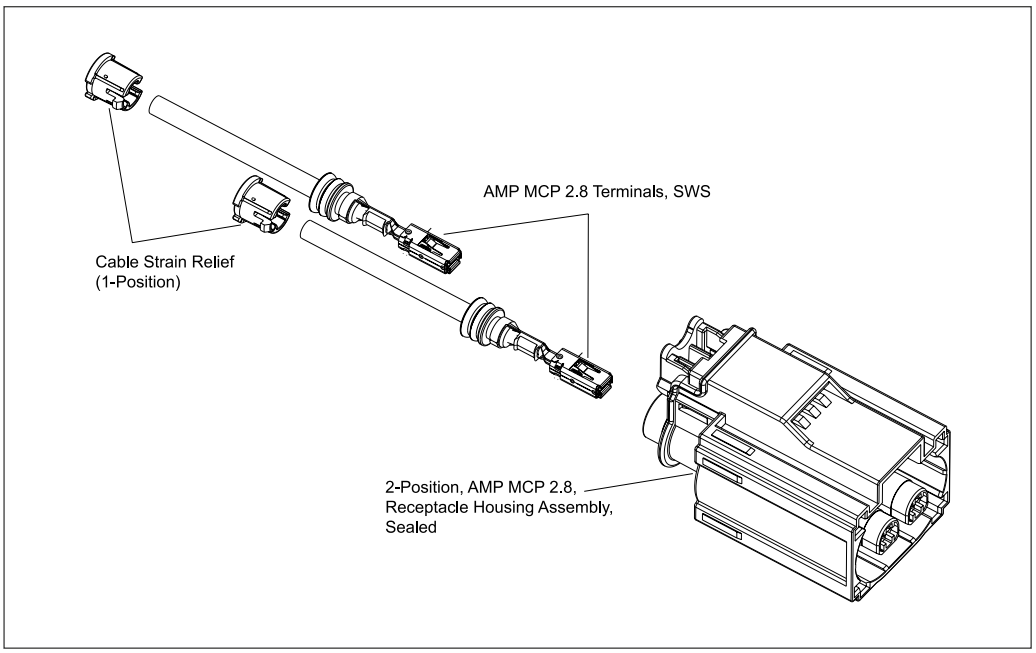

* Drawing number is NOT the order number!

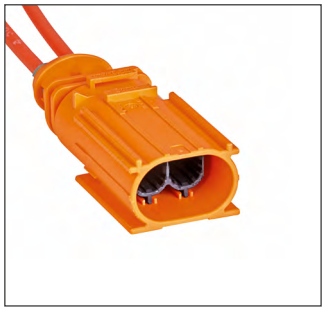

Applications

- DC / DC Converter
- HV Heater
- HV Climate Compressor
- On-Board Charger

Technical Features

Poles:
2

Conductor Cross-Sections:
2.5 mm² to 4 mm²

Wire Type:
Single-core

Tab Size:
2.8 mm x 0.8 mm

Voltage Rating:
1,000 VDC

Temperature Range:
-40°C up to 140°C

Current Carrying Capability:
30 A at 85°C (4 mm²)

IP Rating, Mated:
IP67, IP6K9K, ISO 20653: IP2XD

IP Rating, Unmated:
IPXXB+ (UL finger + 2 mm / 30 N)

Latch Access Type:
Tool accessible

Fire Classification:
V0

Vibration Level:
SG 3 (LV 215-1)

Shielding / Options:
N/A

EMC Shielding Resistance:
N/A

Available Codings:
A, B, D, E, F

Product Specification:
108-94679

Application Specification:
114-94554

AMP+ HVU 280 2p xi – Inline Cap

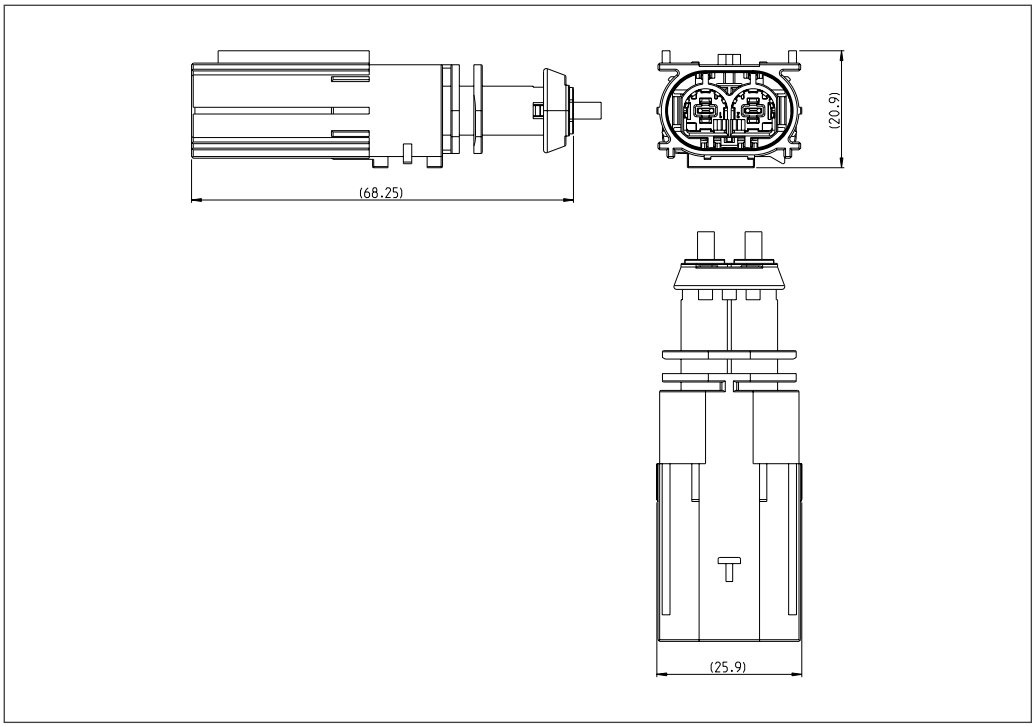

Drawing 2330222 *

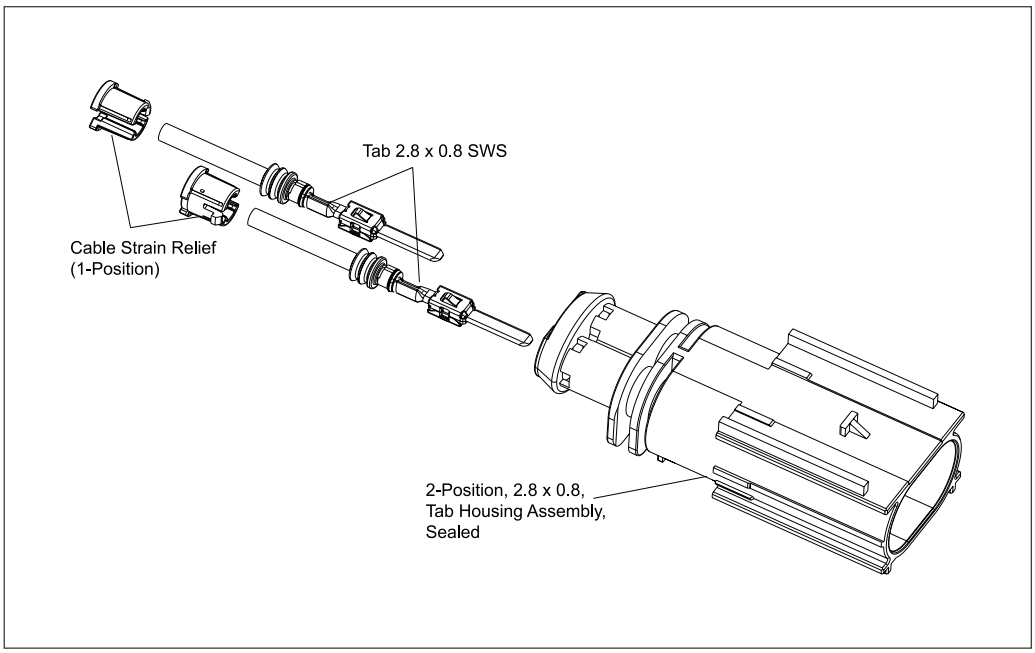

* Drawing number is NOT the order number!

NOTES

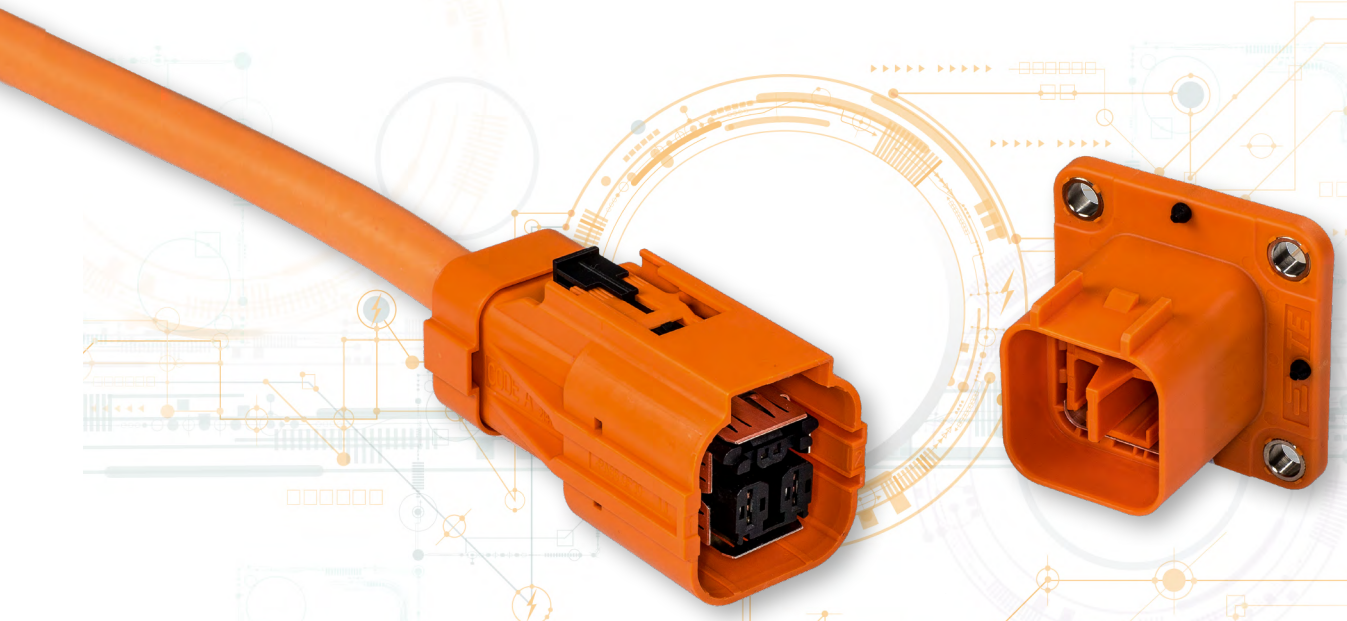

AMP+ HVA 630 HV INTERCONNECTION SYSTEM INTRODUCTION

Our AMP+ HVA 630 interconnection system is touch-safe and provides CPA (Connector Position Assurance), as well as HVIL (High Voltage Interlock) functionality.

High-voltage applications typically require sealed and shielded two-pole DC connectors and headers.

At its core the AMP+ HVA 630 interconnenction system features our proven AMP MCP 6.3 terminal. The shielded multi-core wire is designed for conductor cross-sections from 2.5 up to 6.0 mm^2. This allows currents of 40 A at 140°C ambient temperature and voltages of up to 850 VDC.

Typical applications for HVA 630 HV interconnection systems include: DC/DC converter, HV heater, HV climate compressor and on-board charger.

Naming Convention
HVA 630 Interconnection System

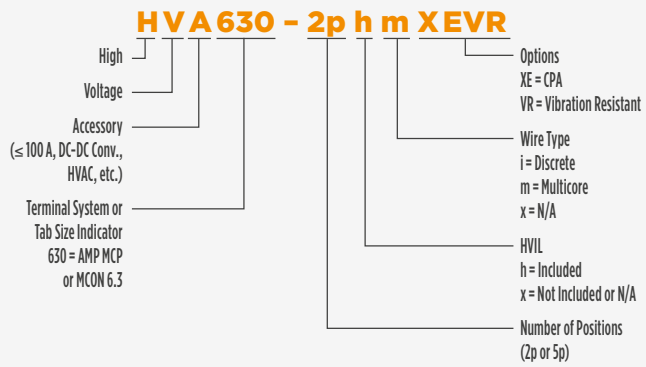

Applications

- DC / DC Converter
- HV Heater
- HV Climate Compressor
- On-Board Charger

Technical Features

Poles:
2

Terminal Size / System:
AMP MCP 6.3

Conductor Cross-Sections:
4.0 mm² to 6.0 mm²

Wire Type:
Multi-core

Voltage Rating:
850 VDC

Temperature Range:
-40°C up to 140°C

Current Carrying Capability:
56 A at 85°C (6 mm²)

IP Rating, Mated:
IP6K7, IP6K9K

IP Rating, Unmated:
IP2XB

HV Interlock Option:
Bridged in the connector

Latch Access Type:
Tool accessible

CPA:
Yes

Vibration Level:
SG 2 (LV 215-1)

Shielding / Options:
Yes

EMC Shielding Resistance:
10 mΩ

Available Codings:
A, F

Product Specification:
108-94264

Application Specification:
114-94100

AMP+ HVA 630 2p hm – Plug

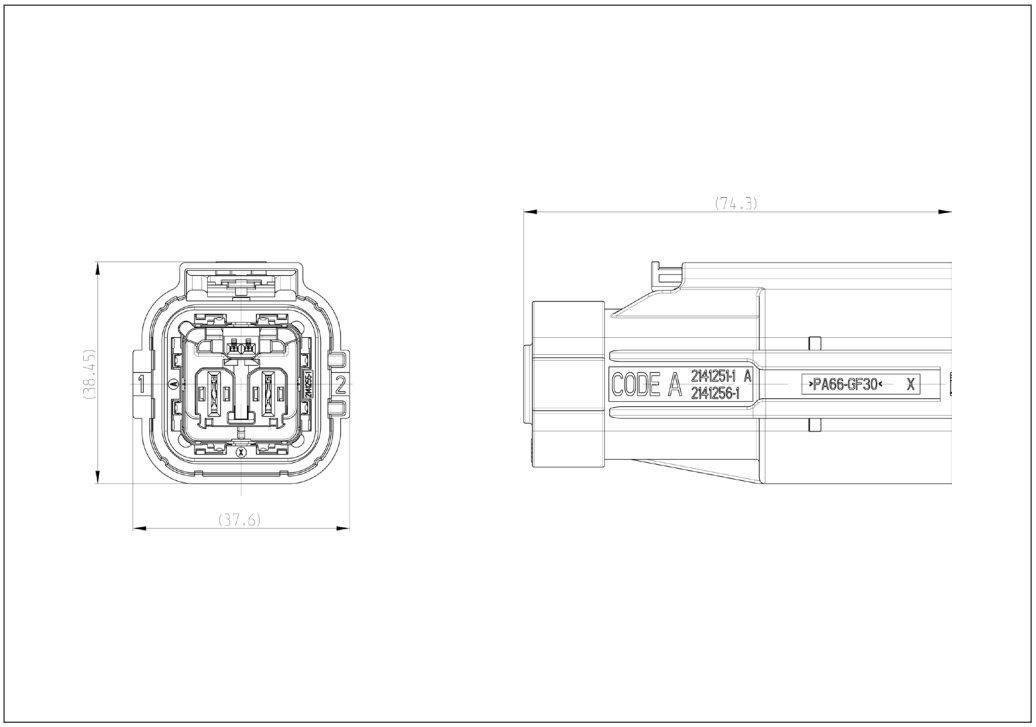

Drawing 114-94100-1 *

Version (Cable Dimension)	Coding	With CPA	Order Information
2.0 x 4.0 mm² released	A	✔	To be ordered see drawing!
	F	✔	
2.0 x 6.0 mm² released	A	✔	

Intelligent Plug	Order Information
The HVA 630 Intelligent Plug is an high voltage connector, which acts as a blind plug. The Intelligent Plug includes no power contacts. Its function is limited to act as shunt of the HVIL contacts, to shield and seal the system.	To be ordered see drawing!

* Drawing number is NOT the order number!

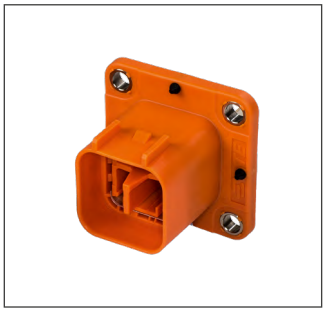

Applications

- DC / DC Converter
- HV Heater
- HV Climate Compressor
- On-Board Charger

Technical Features

Poles:
2

Tab Size:
6.3 mm

Wire Type:
Single-core

Voltage Rating:
850 VDC

Temperature Range:
-40°C up to 140°C

Current Carrying Capability:
56 A at 85°C (6 mm²)

IP Rating, Mated:
IP6K7, IP6K9K

IP Rating, Unmated:
IP2XB

HV Interlock Option:
Bridged in the connector

Vibration Level:
SG 2 (LV 215-1)

Shielding / Options:
Yes

EMC Shielding Resistance:
10 mΩ

Available Codings:
A, F

Product Specification:
108-94264

Application Specification:
114-94100

Interface Drawing:
114-94036

Interface Drawing Adapter Plate:
114-94037

AMP+ HVA 630 2p hi – Header

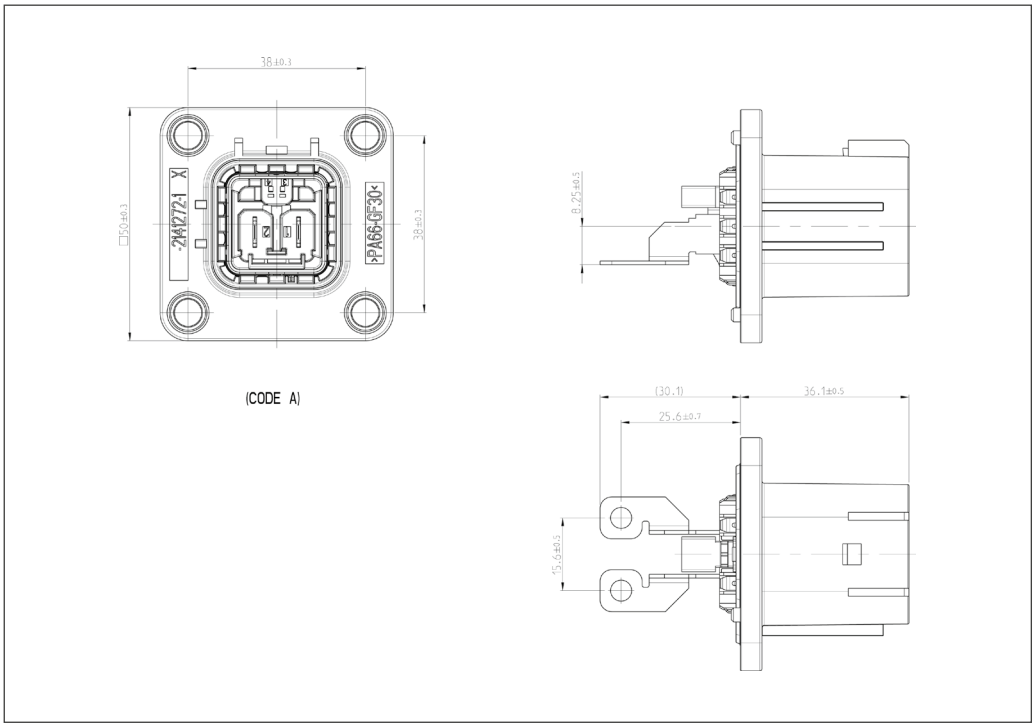

Drawing 2141272 *

	Coding	Order Information
HVA 630 - 2p Header	A F	To be ordered see drawing!

* Drawing number is NOT the order number!

NOTES

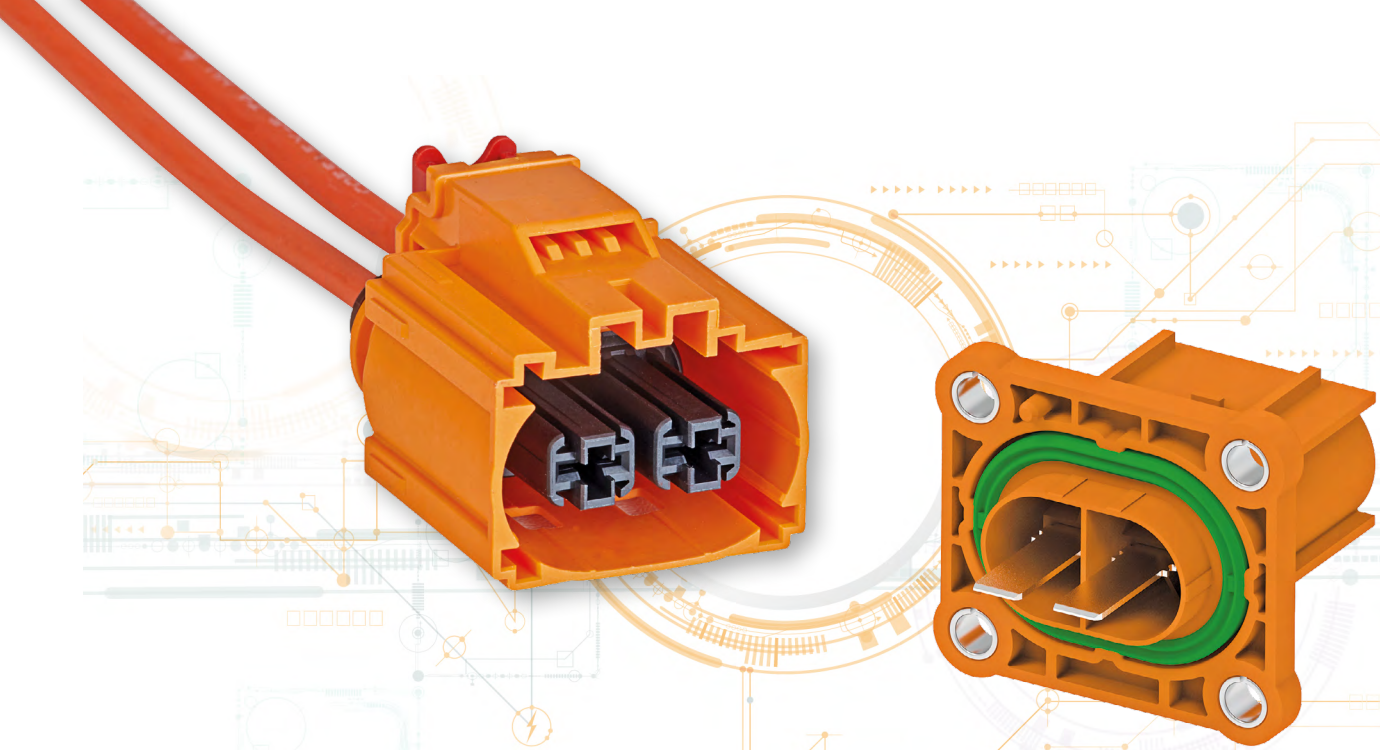

AMP+ HVU 630 2P HV INTERCONNECTION SYSTEM INTRODUCTION

The AMP+ HVU 630 two-pole connector for unshielded applications allows for a current of up to 45 A (at 85°C) for 4 mm² cables and achieves vibration class LV 215 for severity level 3. The system is capable of handling voltage levels up to 1,000 VDC.

The connector system features a tool activated latching mechanism with optimized packaging size and routing flexibility. In addition it provides finger protection according to UL standard. For the header V0 flame resistant isolation material was used.

The HVU 630-2p connector can be applied on DC/DC converter, on-board charger, HV electric heater and electric climate compressor.

Naming Convention
HVU 630 Interconnection System

HVU630 – 2p x m XEVR

- High
- Voltage
- Accessory (≤ 100 A, DC-DC Conv., HVAC, etc.)
- Terminal System or Tab Size Indicator 630 = AMP MCP or MCON 6.3
- Number of Positions (2p or 5p)
- HVIL h = Included x = Not Included or N/A
- Wire Type i = Discrete m = Multicore x = N/A
- Options XE = CPA VR = Vibration Resistant

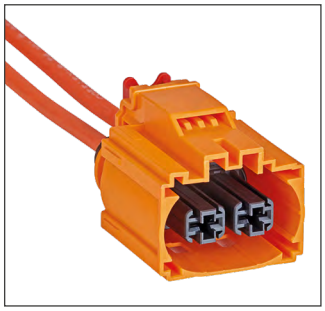

Applications

- DC / DC Converter
- HV Heater
- HV Climate Compressor
- On-Board Charger

Technical Features

Poles:
2

Terminal Size / System:
AMP MCP 6.3

Conductor Cross-Sections:
4 mm^2

Voltage Rating:
1,000 VDC

Temperature Range:
-40°C up to 140°C

Current Carrying Capability:
45 A at 85°C (4 mm²)

IP Rating, Mated:
IP67, IP6K9K, ISO 20653: IP2XD

IP Rating, Unmated:
IPXXB+ (UL finger + 2 mm / 30 N)

Latch Access Type:
Tool accessible

CPA:
Yes

Fire Classification:
HB

Vibration Level:
SG 3 (LV 215-1)

Shielding / Options:
N/A

EMC Shielding Resistance:
N/A

Available Codings:
A (optional: B, C, D)

Product Specification:
108-94680

Application Specification:
114-94552

AMP+ HVU 630 2p xi XEVR – Plug

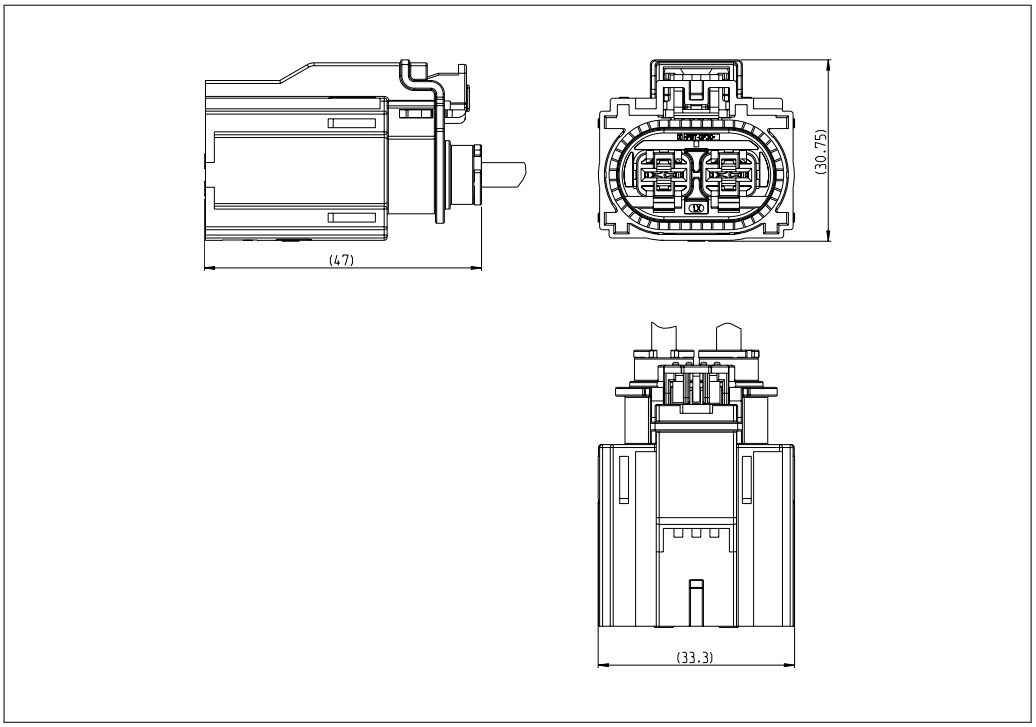

Drawing 2319388 *

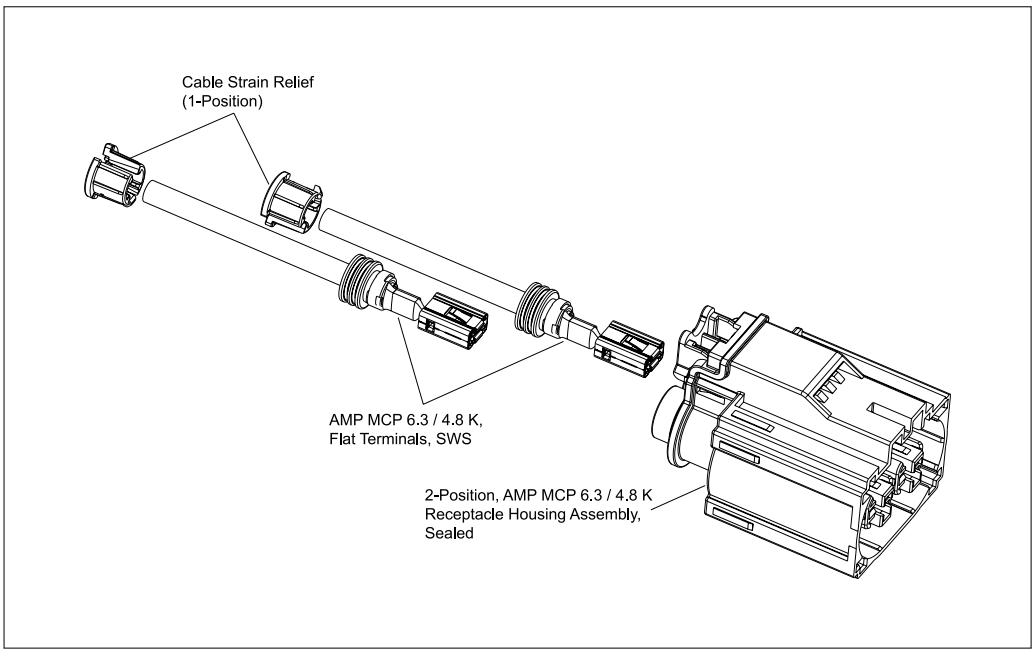

* Drawing number is NOT the order number!

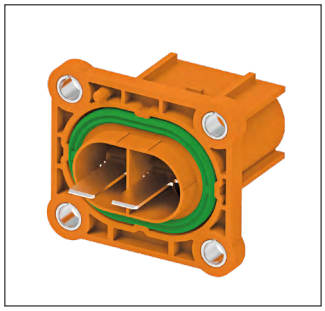

Applications

- DC / DC Converter
- HV Heater
- HV Climate Compressor
- On-Board Charger

Technical Features

Poles:
2

Tab Size:
6.3 mm

Voltage Rating:
1,000 VDC

Temperature Range:
-40°C up to 140°C

Current Carrying Capability:
45 A at 85°C (4 mm²)

IP Rating, Mated:
IP67, IP6K9K, ISO 20653: IP2XD

IP Rating, Unmated:
UL2231-2 (finger) + 2 mm / 30 N

Latch Access Type:
N/A

Fire Classification:
V0 for header housing

Vibration Level:
SG 3 (LV 215-1)

Shielding / Options:
N/A

EMC Shielding Resistance:
N/A

Available Codings:
A, B, D, E, F

Product Specification:
108-94680

Application Specification:
114-94552

AMP+ HVU 630 2p xi – Header

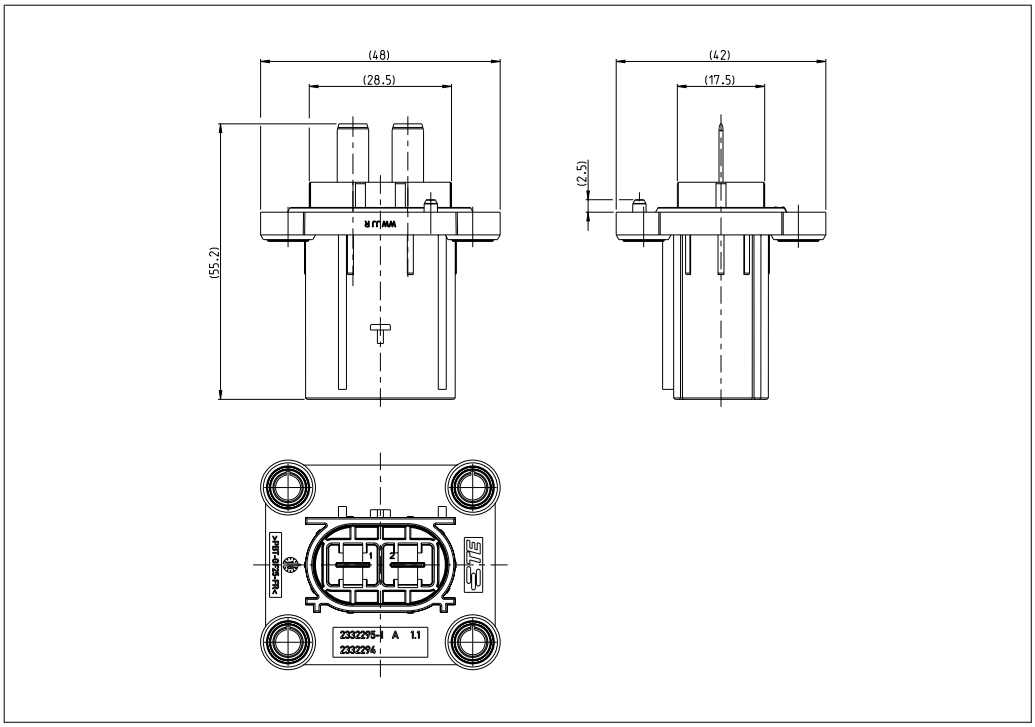

Drawing 2332294 *

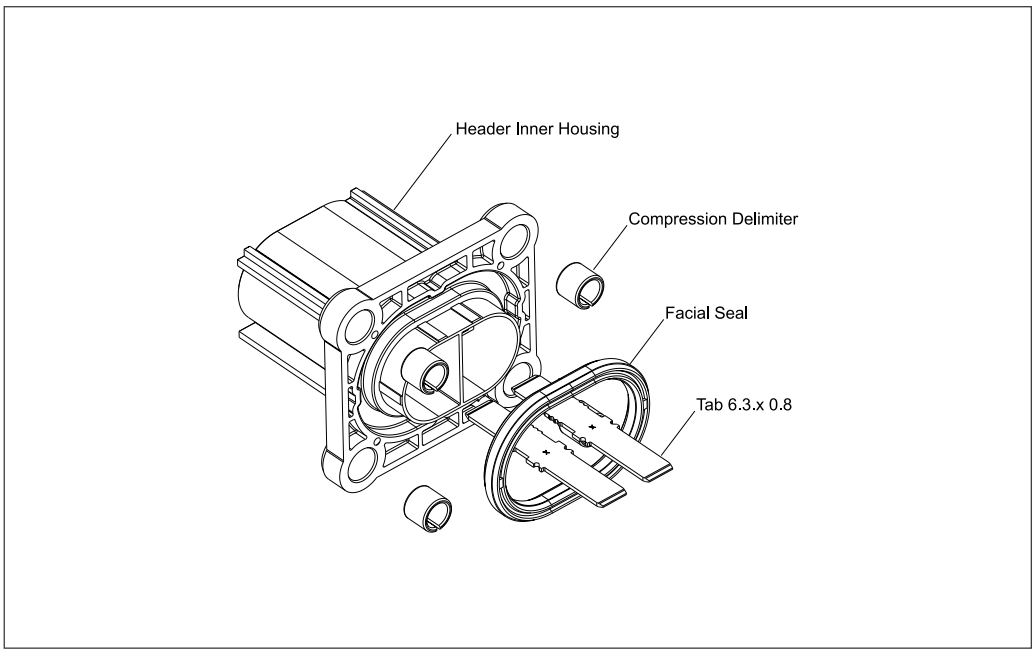

* Drawing number is NOT the order number!

NOTES

AMP+ HVA 630 5P HV INTERCONNECTION SYSTEM INTRODUCTION

The AMP+ HVA 630 five-pole connector system allows for a three-phase charging current of 32 A and meets the relevant IEC 62196-2 type 2 standard for a maximum charging capacity of 22 kW.

The increasing battery capacity of plug-in hybrid and electric vehicles requires a higher amount of charging power to enable faster charging times.

Our AMP+ HVA 630 5p interconnection system provides finger protection and is designed for multi-shielded 360°, includes High Voltage Interlock functionality and is based on synthetic material meeting VO flammability requirements.

Due to its lever control, the necessary mating forces is less than 70 N.

Naming Convention
HVA 630 Interconnection System

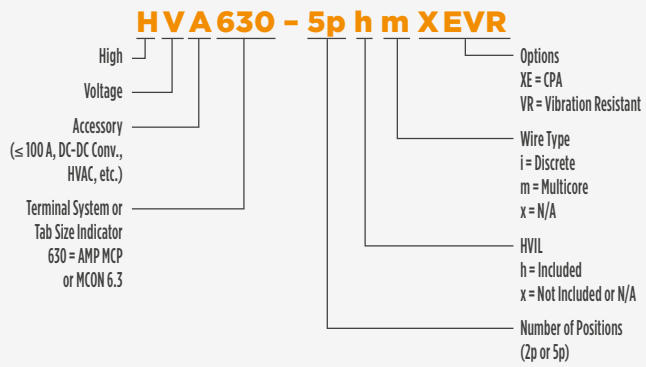

Applications

- DC / DC Converter
- HV Heater
- HV Climate Compressor
- On-Board Charger

Technical Features

Poles:
5

Terminal Size / System:
AMP MCP 6.3

Conductor Cross-Sections:
4.0 mm² and 6.0 mm²

Voltage Rating:
850 VDC

Temperature Range:
-40°C up to 140°C

Current Carrying Capability:
50 A at 85°C (6 mm²)

IP Rating, Mated:
IP6K7, IP6K9K

IP Rating, Unmated:
IP2XB

HV Interlock Option:
Bridged in the connector

CPA:
Yes

Fire Classification:
HB

Vibration Level:
SG 2 (LV 215-1)

Shielding / Options:
Yes

EMC Shielding Resistance:
10 mΩ

Available Codings:
A

Product Specification:
108-94235

Application Specification:
114-94114

AMP+ HVA 630 5p hm – Plug

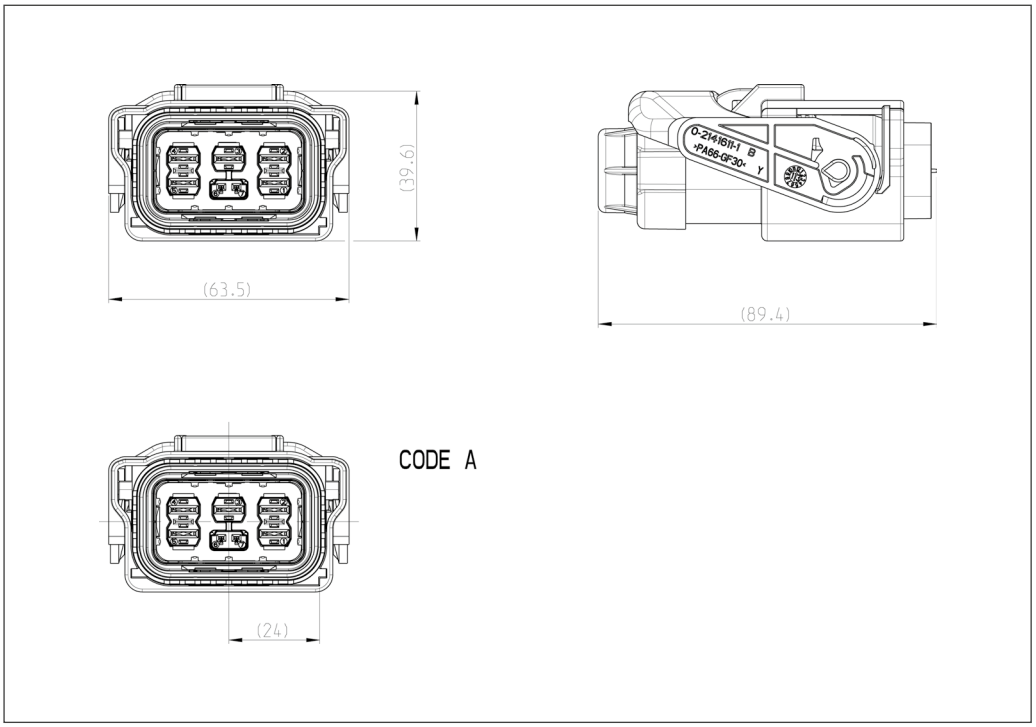

Drawing 114-94114-1 *

Version (Cable Dimension)		Coding	With CPA	Without CPA	Order Information
5.0 x 6.0 mm²	released	A	✔		To be ordered see drawing!
				✔	
4.0 x 4.0 mm²	released	A	✔		
				✔	
3.0 x 4.0 mm²	released	A	✔		
				✔	
3.0 x 6.0 mm²	in planning	A			
4.0 x 6.0 mm²		A			

* Drawing number is NOT the order number!

Applications

- DC / DC Converter
- HV Heater
- HV Climate Compressor
- On-Board Charger

Technical Features

Poles:
5

Tab Size:
6.3 mm

Conductor Cross-Sections:
4.0 mm² and 6.0 mm²

Voltage Rating:
850 VDC

Temperature Range:
-40°C up to 140°C

Current Carrying Capability:
50 A at 85°C (6 mm²)

IP Rating, Mated:
IP6K7, IP6K9K

IP Rating, Unmated:
IP2XB

HV Interlock Option:
Yes

Fire Classification:
V0

Vibration Level:
SG 2 (LV 215-1)

Shielding / Options:
Yes

EMC Shielding Resistance:
10 mΩ

Available Codings:
A

Product Specification:
108-94235

Application Specification:
114-94114

Interface Drawing:
114-94099

Interface Drawing Adapter Plate:
114-94279

AMP+ HVA 630 5p hx – Header, 180° Tabs

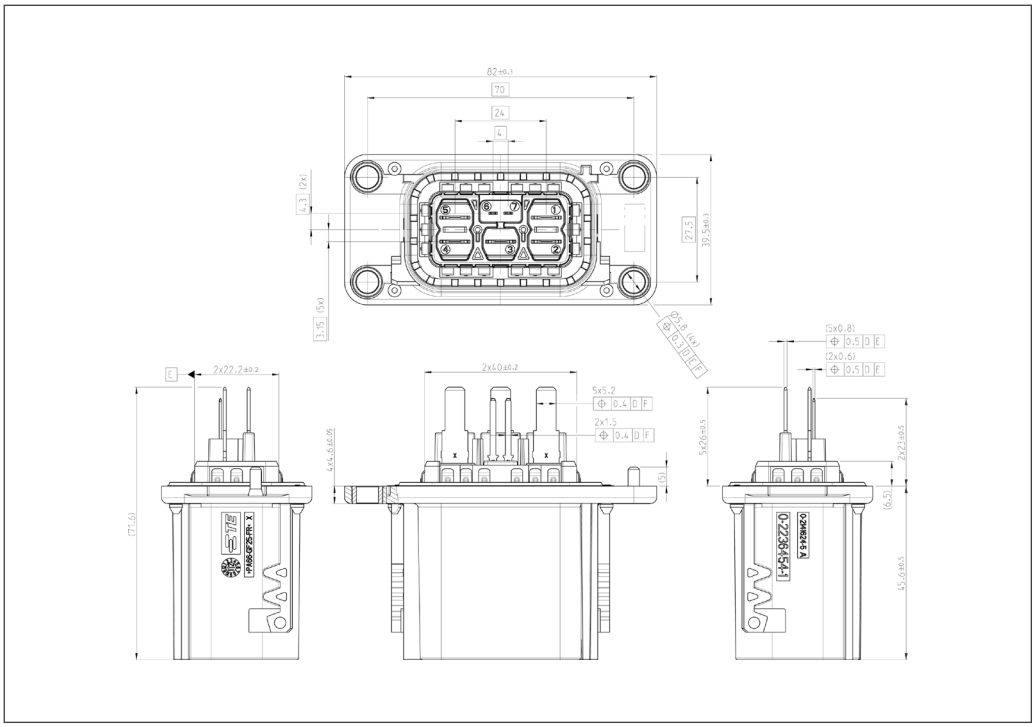

Drawing 2236454 *

	Coding	Order Information
HVA 630 - 5p - Header	A	To be ordered see drawing!

* Drawing number is NOT the order number!

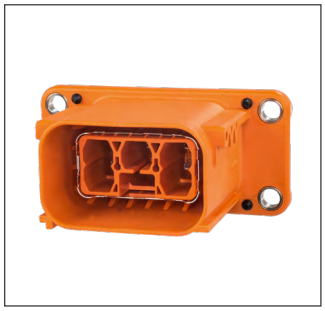

Applications

- DC / DC Converter
- HV Heater
- HV Climate Compressor
- On-Board Charger

Technical Features

Poles:
5

Tab Size:
6.3 mm

Voltage Rating:
850 VDC

Temperature Range:
-40°C up to 140°C

Current Carrying Capability:
50 A at 85°C (6 mm^2)

IP Rating, Mated:
IP6K7, IP6K9K

IP Rating, Unmated:
IP2XB

HV Interlock Option:
Yes

Fire Classification:
V0

Vibration Level:
SG 2 (LV 215-1)

Shielding / Options:
Yes

EMC Shielding Resistance:
10 mΩ

Available Codings:
A

Product Specification:
108-94235

Application Specification:
114-94114

Interface Drawing:
114-94099

Interface Drawing Adapter Plate:
114-94279

AMP+ HVA 630 5p hx – Header, 90° Tabs

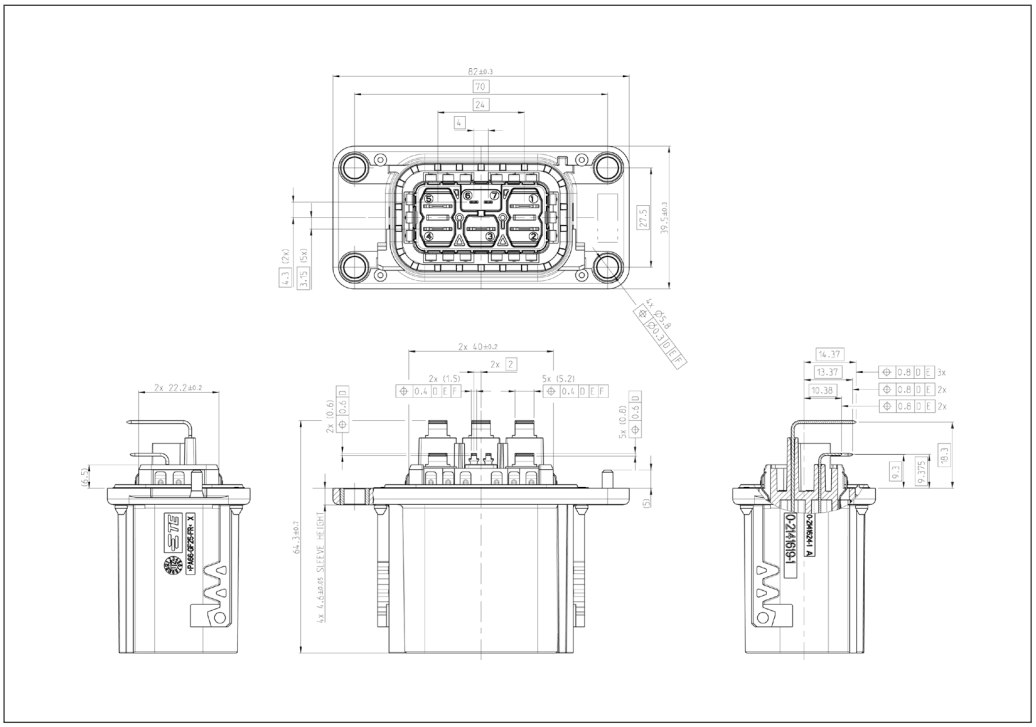

Drawing 2141619 *

	Coding	Order Information
HVA 630 - 5p - Header	A	To be ordered see drawing!

* Drawing number is NOT the order number!

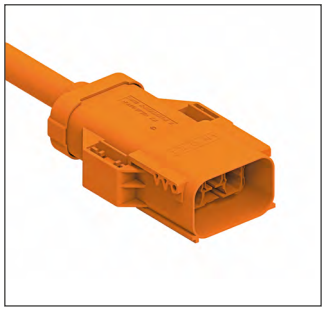

Applications

- DC / DC Converter
- HV Heater
- HV Climate Compressor
- On-Board Charger

Technical Features

Poles:
5

Terminal Size / System:
AMP MCP 6.3

Conductor Cross-Sections:
4.0 mm² and 6.0 mm²

Wire Type:
Multi-core

Voltage Rating:
850 VDC

Temperature Range:
-40°C up to 140°C

Current Carrying Capability:
50 A at 85°C (6 mm²)

IP Rating, Mated:
IP6K7, IP6K9K

IP Rating, Unmated:
IP2XB

HV Interlock Option:
N/A

Vibration Level:
SG 2 (LV 215-1)

Shielding / Options:
Yes

EMC Shielding Resistance:
10 mΩ

Available Codings:
A

Product Specification:
not available yet

Application Specification:
114-94502

Interface Drawing:
114-94099

Interface Drawing Adapter Plate:
N/A

AMP+ HVA 630 5p xm – Inline Cap

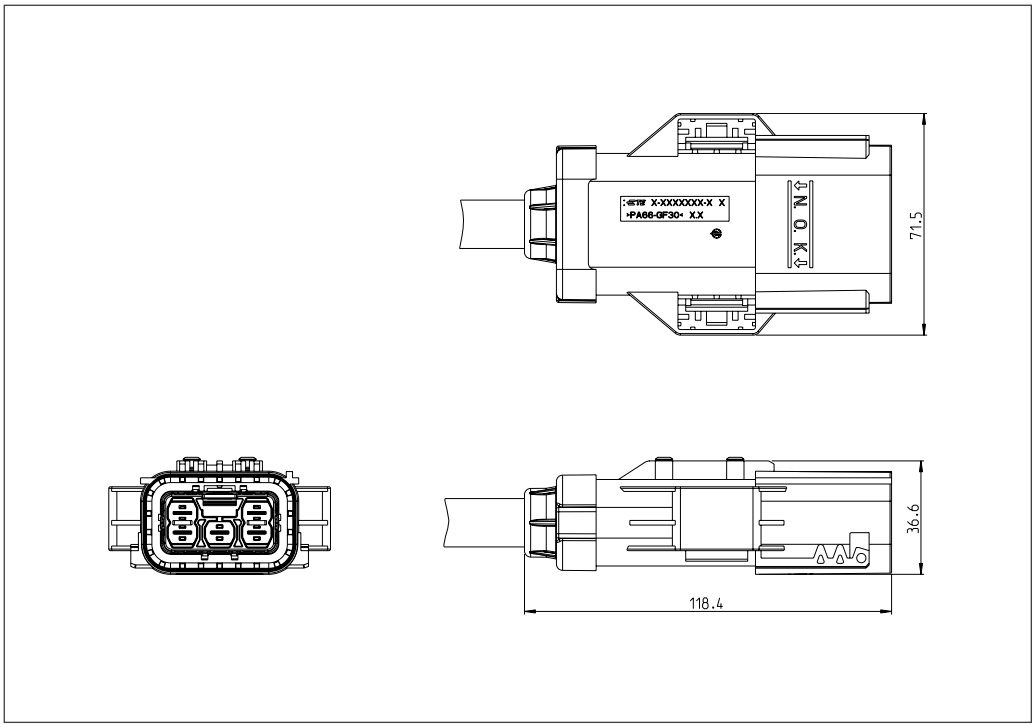

Drawing 2318819 *, 2318821 * , 2318822 *

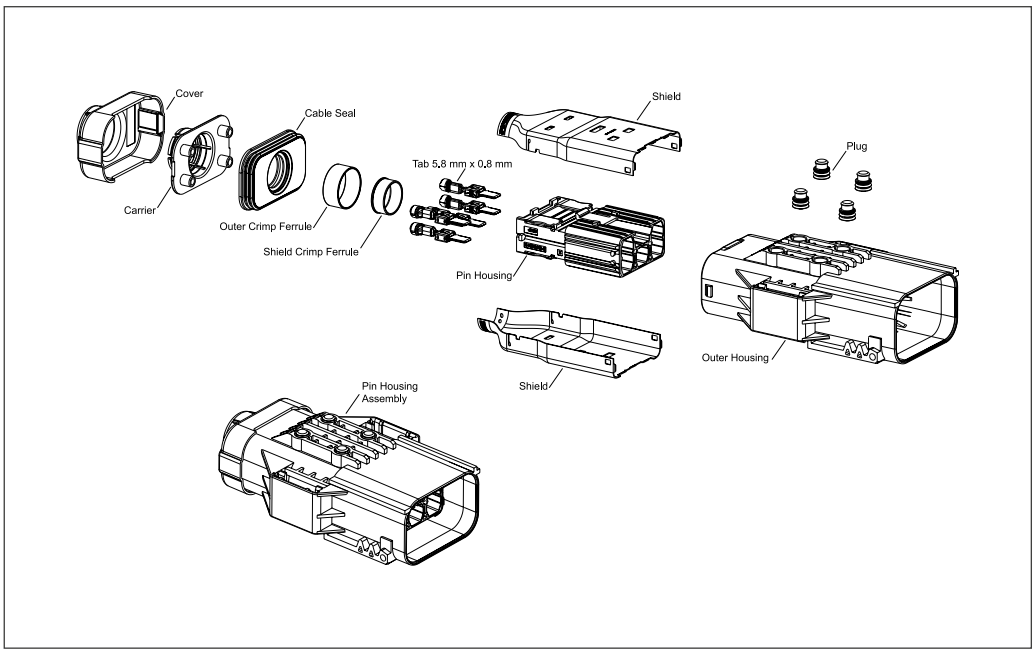

* Drawing number is NOT the order number!

AMP+ HVA 630 Connector System Kits

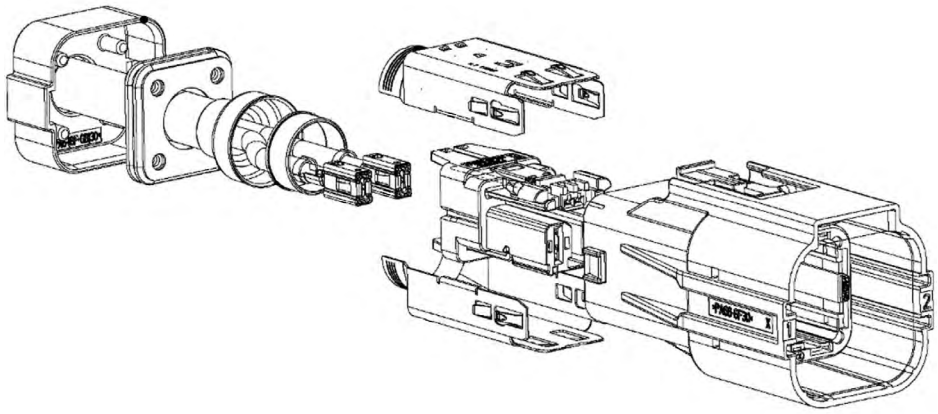

Example: Kit Number YHVA630-2phm-4mm-A

AMP+ HVA 630 Connector System Kits *)

Connector	Position	Cable (mm^2)	Key	LADD Connector Kit Number	Mating Header Part Number	LADD Header Kit Number
HVA 630	2	4	A	YHVA630-2phm-4mm-A	90°: 1-2141272-1 180°: 2-2141272-1	90°: YHVA630-2phi-hdr-A
		6	A	YHVA630-2phm-6mm-A	90°: 1-2141272-1 180°: 2-2141272-1	90°: YHVA630-2phi-hdr-A
	3	4	A	YHVA630-3phm-4mm-A	90°: 2141619-1 180°: 2236454-1	–
	4	4	A	YHVA630-4phm-4mm-A	90°: 2141619-1 180°: 2236454-1	–
	5	6	A	YHVA630-5phm-6mm-A	90°: 2141619-1 180°: 2236454-1	–

***) Kits include HVIL terminals**

AMP+ HVU 630 5P HV UNSHIELDED INTERCONNECTION SYSTEM INTRODUCTION

Our AMP+ HVU five-pole connector system for unshielded charging applications allows for a current of up to 60 A (at 85°C) for 6 mm² cables and achieves vibration class LV 215 for severity level 3. The system is capable of handling voltage levels up to 1,000 VDC.

The connector system has a tool activated or finger activated latching mechanism with optimized packaging size and routing flexibility. In addition it provides finger protection according to UL standard. The header features V0 flame resistant isolation material.

The HVU 630 5p connector is specifically designed for on-board charger applications.

Naming Convention
HVU 630 Interconnection System (5p)

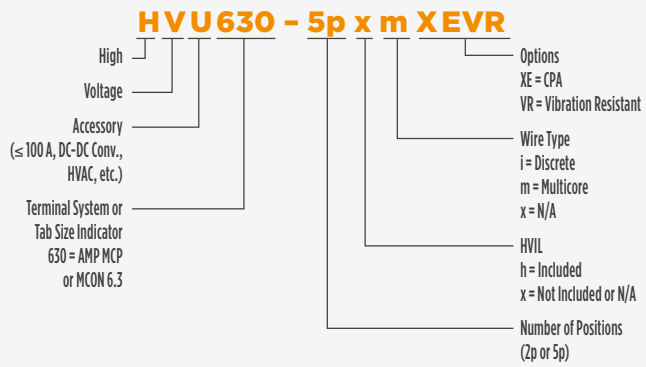

Applications

- On-Board Charger

Technical Features

Poles:
5

Terminal Size / System:
AMP MCP 6.3

Conductor Cross Section:
4 mm² to 6 mm²

Voltage Rating:
1,000 VDC

Temperature Range:
-40°C up to 140°C

Current Carrying Capability:
50 A at 85°C (6 mm²)

IP Rating, Mated:
IP6K7, IP6K9K

IP Rating, Unmated:
UL2231-2 (finger) + 2 mm / 30 N

HV Interlock Option:
Bridged in the connector

CPA:
Yes

Vibration Level:
SG 3 (LV 215-1)

Shielding / Options:
N/A

EMC Shielding Resistance:
N/A

Available Codings:
A

Product Specification:
108-94681

Application Specification:
114-94552

AMP+ HVU 630 5p xm XEVR – Plug

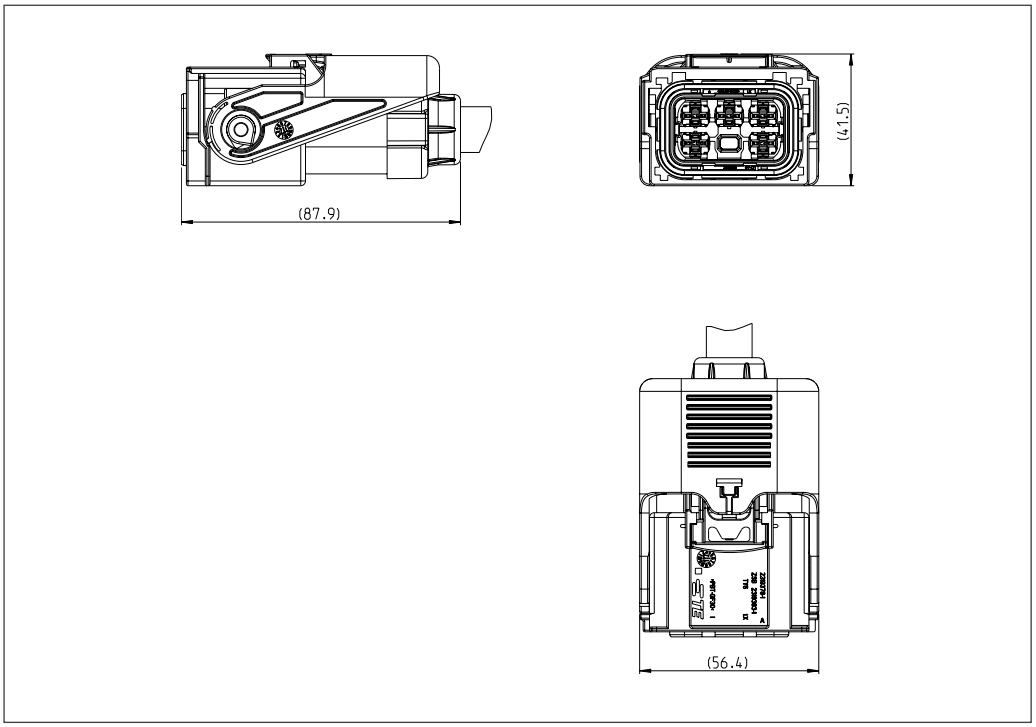

Drawing 2319386 *

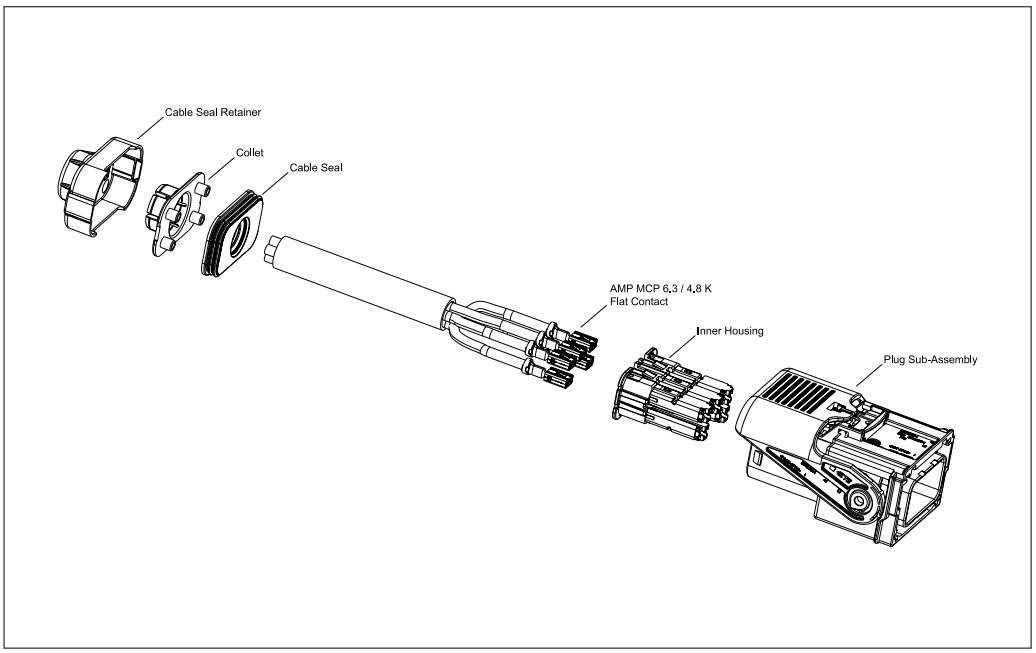

* Drawing number is NOT the order number!

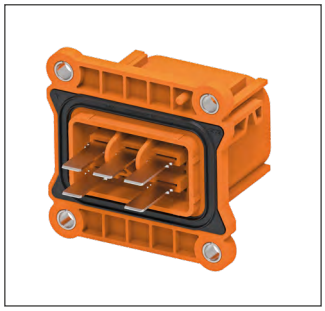

Applications

- On-Board Charger

Technical Features

Poles:
5

Tab Size:
6.3 mm

Voltage Rating:
1,000 VDC

Temperature Range:
-40°C up to 140°C

Current Carrying Capability:
60 A at 85°C (6 mm²)

IP Rating, Mated:
IP67, IP6K9K, ISO 20653: IP2XD

IP Rating, Unmated:
UL2231-2 (finger) + 2 mm / 30 N

HV Interlock Option:
Bridged in the connector

Latch Access Type:
N/A

Fire Classification:
V0 for Header Housing

Vibration Level:
SG 3 (LV 215-1)

Shielding / Options:
N/A

EMC Shielding Resistance:
N/A

Available Codings:
A, B, D, E, F

Product Specification:
108-94681

Application Specification:
114-94552

AMP+ HVU 630 5p xi – Header

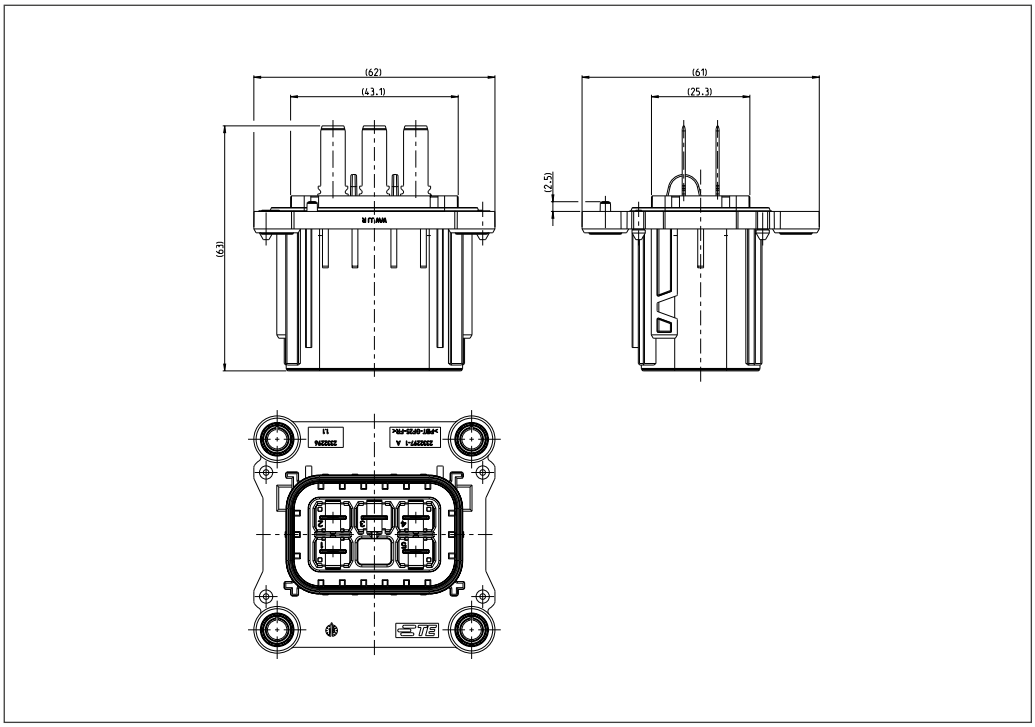

Drawing 2332296 *

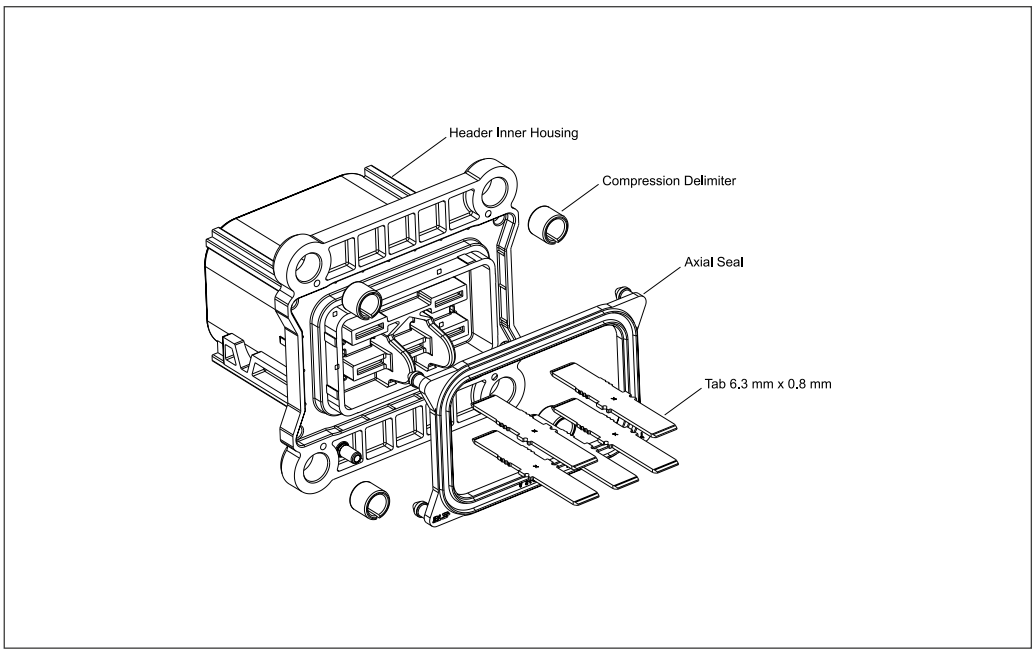

* Drawing number is NOT the order number!

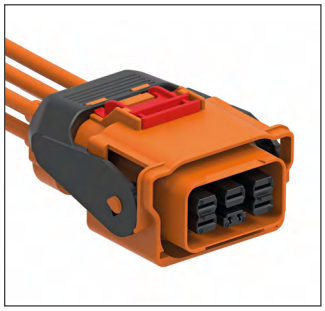

Applications

- On-Board Charger

Technical Features

Poles:
5

Terminal Size / System:
AMP MCP 6.3

Conductor Cross-Sections:
6.0 mm² + 0.5 mm²

Wire Type:
Single-core

Voltage Rating:
850 VDC

Temperature Range:
-40°C up to 140°C

Current Carrying Capability:
40 A at 85°C

IP Rating, Mated:
IP67, IP6K9K, ISO 20653: IP2XD

IP Rating, Unmated:
ISO 20653: IP2XB
(as existing 114-94114-1)

HV Interlock Option:
Integrated, internal

Latch Access Type:
Finger

CPA:
Yes

Fire Classification:
HB

Vibration Level:
SG 3 (LV 215-1)

Shielding / Options:
N/A

EMC Shielding Resistance:
N/A

Available Codings:
A

Product Specification:
108-94235

Application Specification:
114-20233

Interface Drawing:
114-94099

Interface Drawing Adapter Plate:
114-94279

AMP+ HVU 630 5p hi XE – Plug

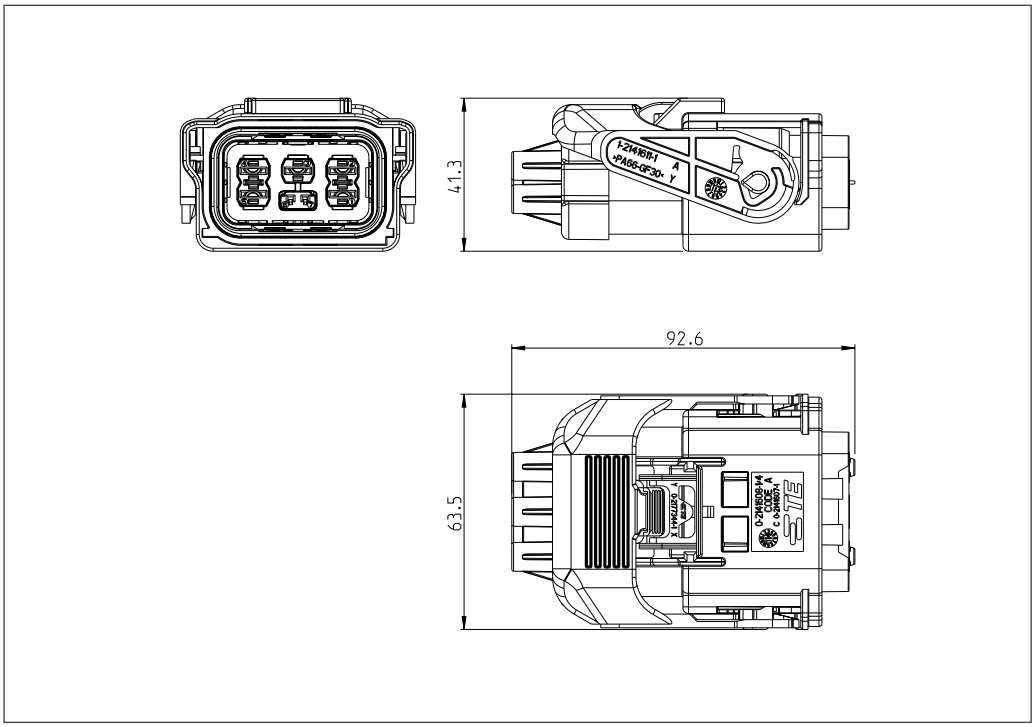

Drawing 2349364 *

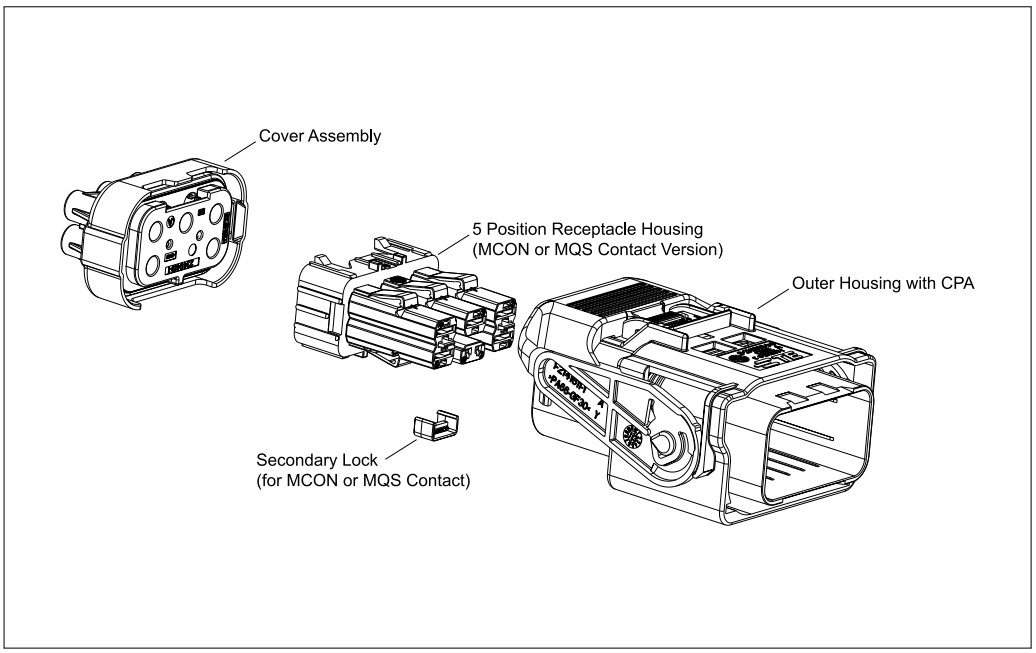

* Drawing number is NOT the order number!

Applications

- On-Board Charger

Technical Features

Poles:
5

Terminal Size / System:
AMP MCP 6.3

Tab Size:
6.3 mm x 0.8 mm

Voltage Rating:
850 VDC

Temperature Range:
-40°C up to 140°C

Current Carrying Capability:
40 A at 85°C

IP Rating, Mated:
IP6K7, IP6K9K

IP Rating, Unmated:
IP2XB

Fire Classification:
V0

Vibration Level:
SG 3 (LV 215-1)

Shielding / Options:
N/A

EMC Shielding Resistance:
N/A

Available Codings:
A

AMP+ HVU 630 5p hi – Header

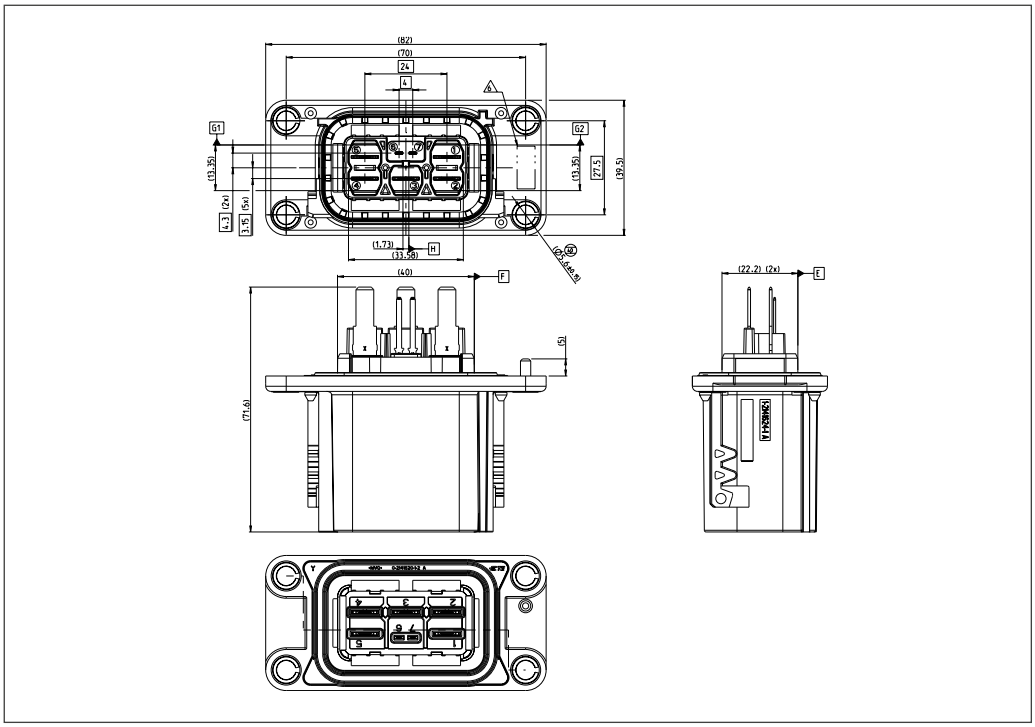

Drawing 2349367 *

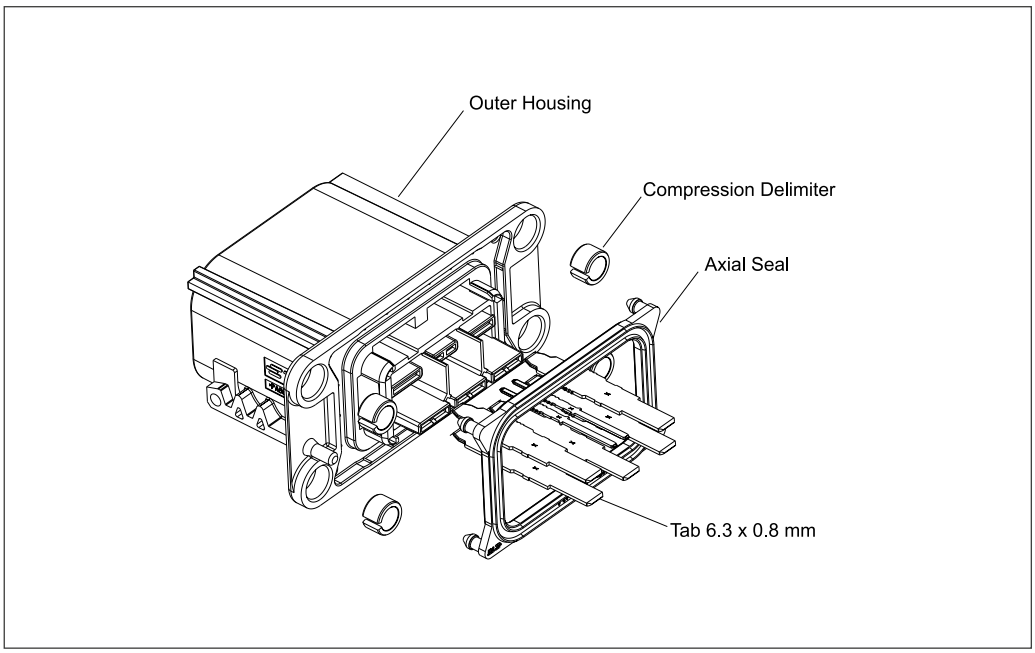

* Drawing number is NOT the order number!

NOTES

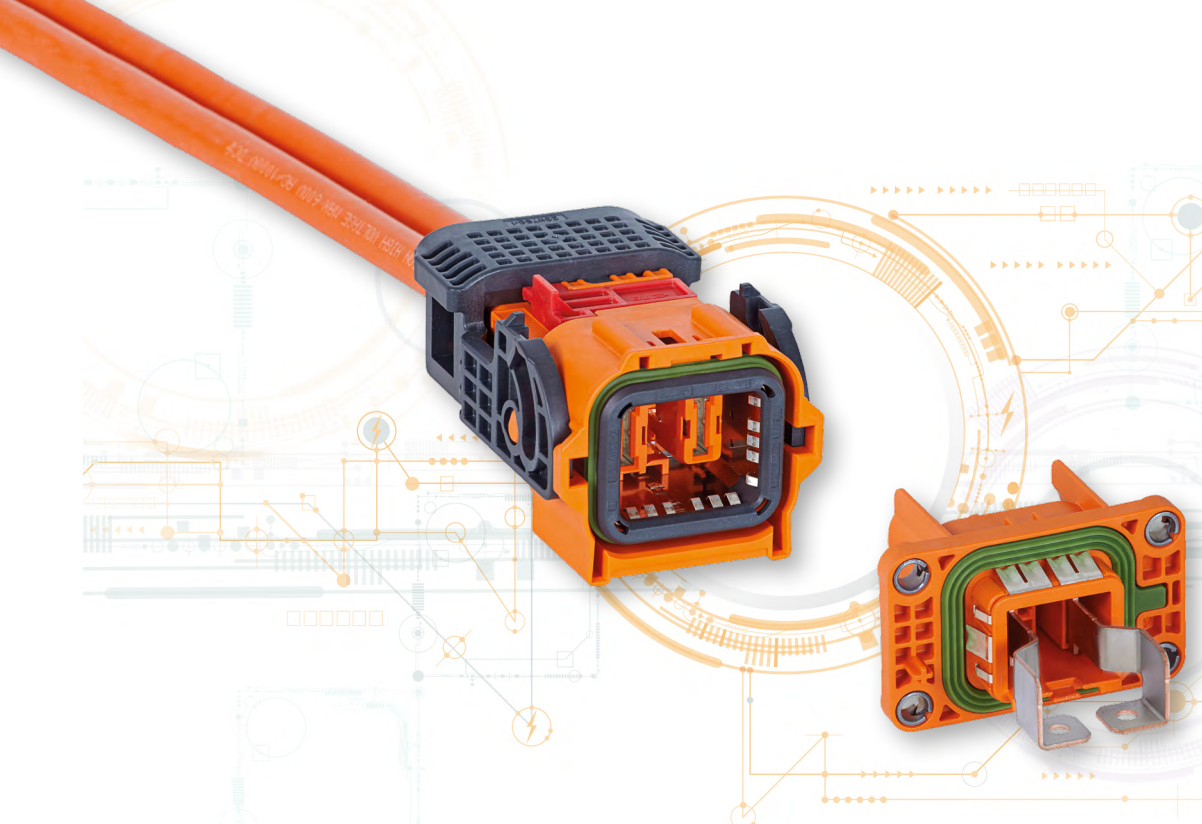

AMP+ HVA 1200 HV INTERCONNECTION SYSTEM INTRODUCTION

The AMP+ HVA 1200 HV interconnection system features a voltage rating of up to 1,000 VDC and a current carrying capability of 100 A at 85°C. It is specifically designed to ensure a safe and reliable connection between the on-board charger, the charging inlet, the battery, the inverter and the e-motor.

The system features a header and two plugs for both straight and right angle connector applications. At its core a newly designed PCON 12 high-power terminal (see page 12) supports a total wire range from 5.0 to 16.0 mm^2 respectively 10.0 to 16.0 mm^2 according to LV 216-2.

For maximum flexibility the single header can be mated with 90° as well as 180° plugs. In addition, the system features an integrated HV interlock completed by the critical built-in touch-safety according to IEC 60529 IPXXB and UL-finger standards.

Naming Convention
HVA 1200 Interconnection System

HVA1200 – 2p hi XEVR

- High
- Voltage
- Accessory (≤ 100 A, DC-DC Conv., HVAC, etc.)
- Terminal System or Tab Size Indicator 1200 = PCON 12 Terminal
- Number of Positions (2p)
- HVIL h = included x = not included or N/A
- Wire Type i = Discrete m = Multicore x = N/A
- Options XE = CPA VR = Vibration Resistant

Applications

- On-Board Charger
- Inverter
- HV Battery
- E-Motor

Technical Features

Poles:
2

Terminal Size / System:
PCON 12

Conductor Cross-Sections:
5 mm^2 to 16 mm^2

Wire Type:
Single-core

Voltage Rating:
1,000 VDC

Temperature Range:
-40°C up to 140°C

Current Carrying Capability:
100 A at 85° (16 mm^2)

IP Rating, Mated:
IP6K7, IP6K9K

IP Rating, Unmated:
IPXXB+ (UL Finger)

HV Interlock Option:
Bridged in the connector

CPA:
Yes

Fire Classification:
V0

Vibration Level:
SG 2 (LV 215-1)

Shielding / Options:
Yes

EMC Shielding Resistance:
10 mΩ

Available Codings:
A, B, C

Product Specification:
108-94749

Application Specification:
114-94518

AMP+ HVA 1200 2p hi XE – Plug 90°

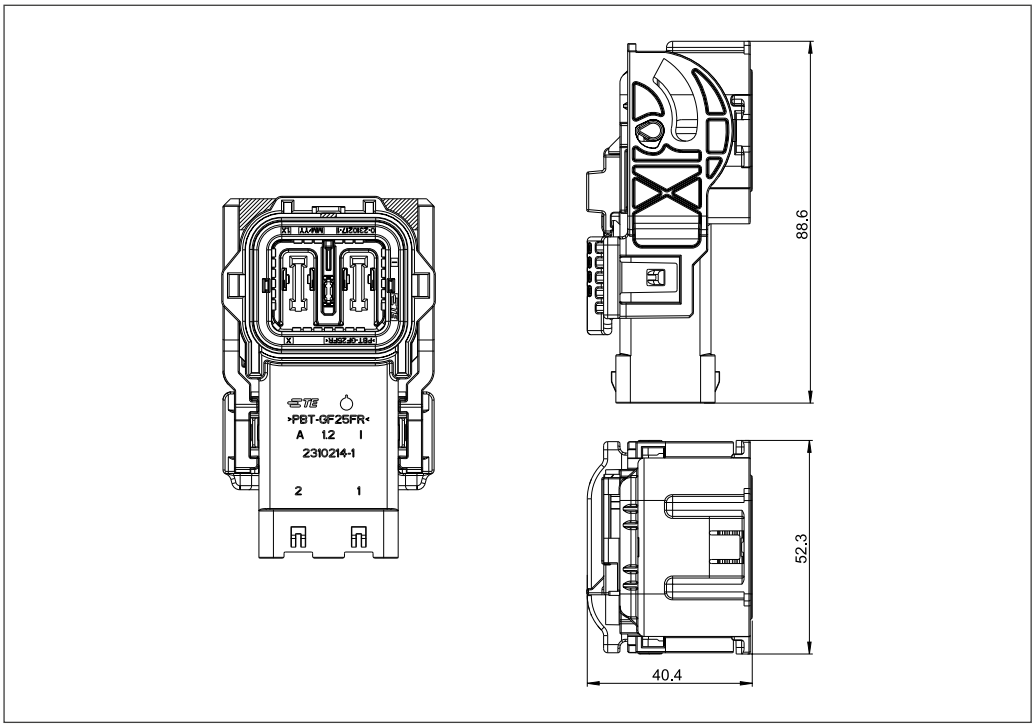

Drawing 2310213 *

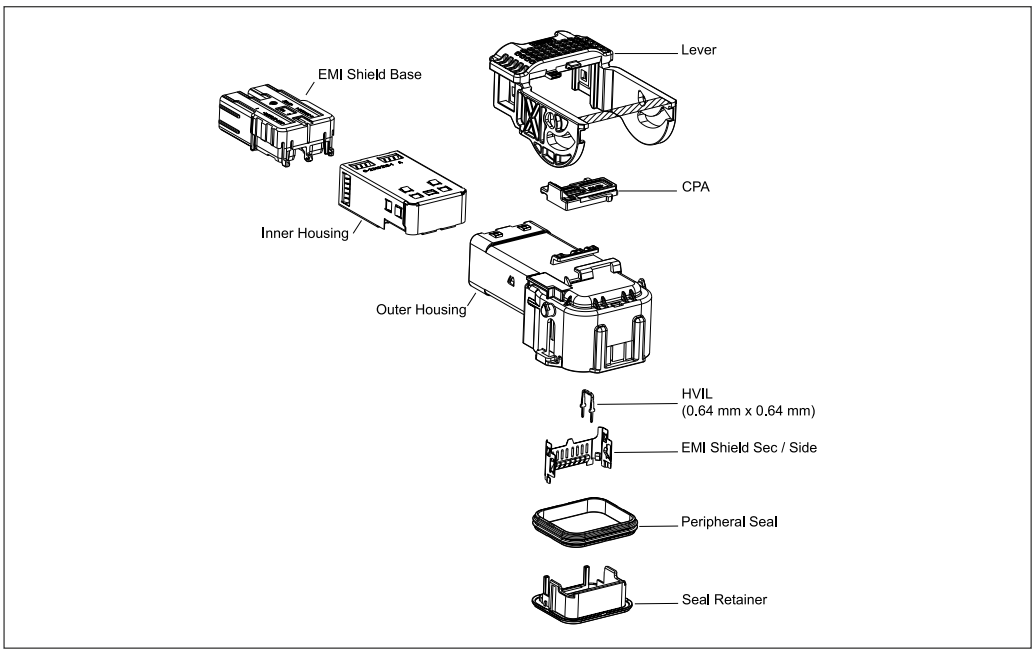

* Drawing number is NOT the order number!

AMP+ HVA 1200 2p hi XE – Plug 180°

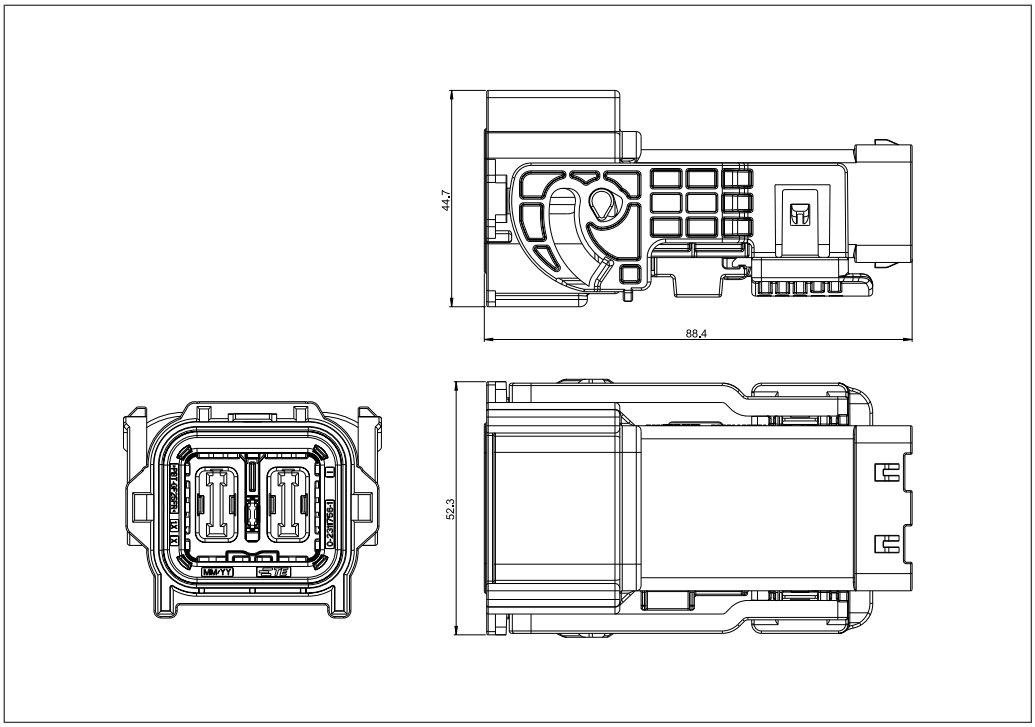

Drawing 2311753 *

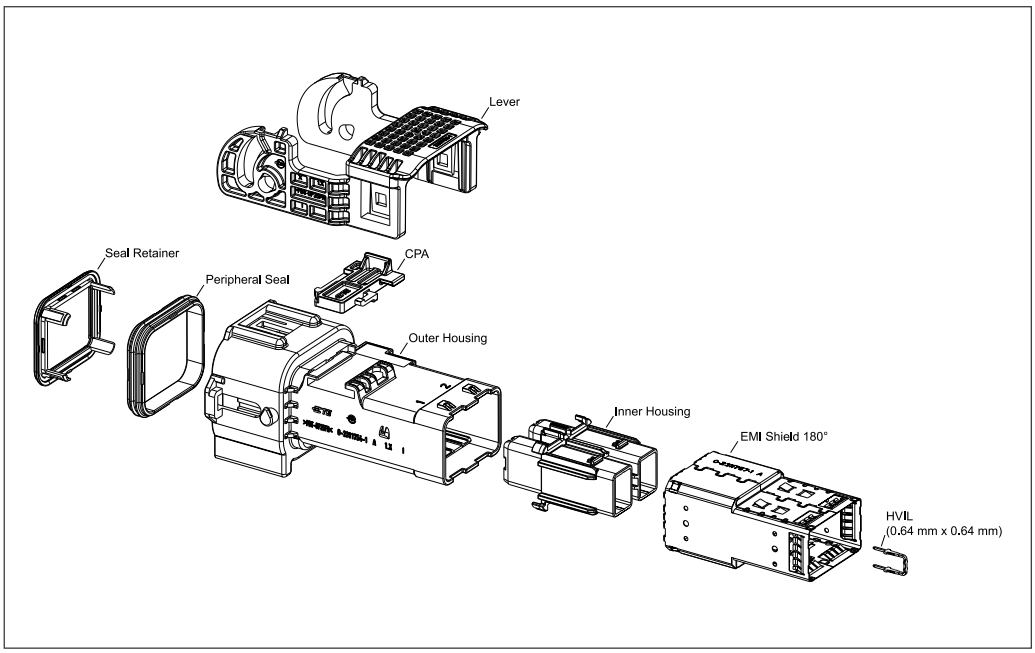

Applications

- On-Board Charger
- Inverter
- HV Battery
- E-Motor

Technical Features

Poles:
2

Terminal Size / System:
PCON 12

Conductor Cross-Sections:
5 mm^2 to 16 mm^2

Voltage Rating:
1,000 VDC

Temperature Range:
-40°C up to 140°C

Current Carrying Capability:
100 A at 85°C (16 mm^2)

IP Rating, Mated:
IP6K7, IP6K9K

IP Rating, Unmated:
IPXXB+ (UL Finger)

HV Interlock Option:
Bridged in the connector

CPA:
Yes

Fire Classification:
V0

Vibration Level:
SG 2 (LV 215-1)

Shielding / Options:
Yes

EMC Shielding Resistance:
10 mΩ

Available Codings:
A, B, C

Product Specification:
108-94749

Application Specification:
114-94518

* Drawing number is NOT the order number!

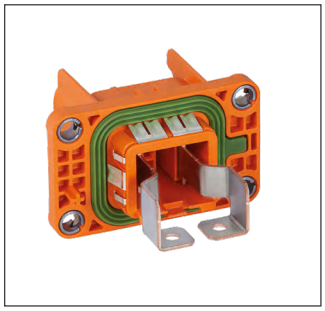

Applications

- On-Board Charger
- Inverter
- HV Battery
- E-Motor

Technical Features

Poles:
2

Terminal Size / System:
PCON 12

Tab Size:
12 mm incl. finger protection

Voltage Rating:
1,000 VDC

Temperature Range:
-40°C up to 140°C

Current Carrying Capability:
120 A at 65°C

IP Rating, Mated:
IP6K7, IP6K9K

IP Rating, Unmated:
IPXXB+ (UL Finger)

HV Interlock Option:
Bridged in the connector

Fire Classification:
V0

Vibration Level:
SG 2 (LV 215-1)

Shielding / Options:
Yes

EMC Shielding Resistance:
10 mΩ

Available Codings:
A, B, C

Product Specification:
108-94749

Application Specification:
114-94515

Interface Drawing Adapter Plate:
208-18103

AMP+ HVA 1200 2p hi – Header

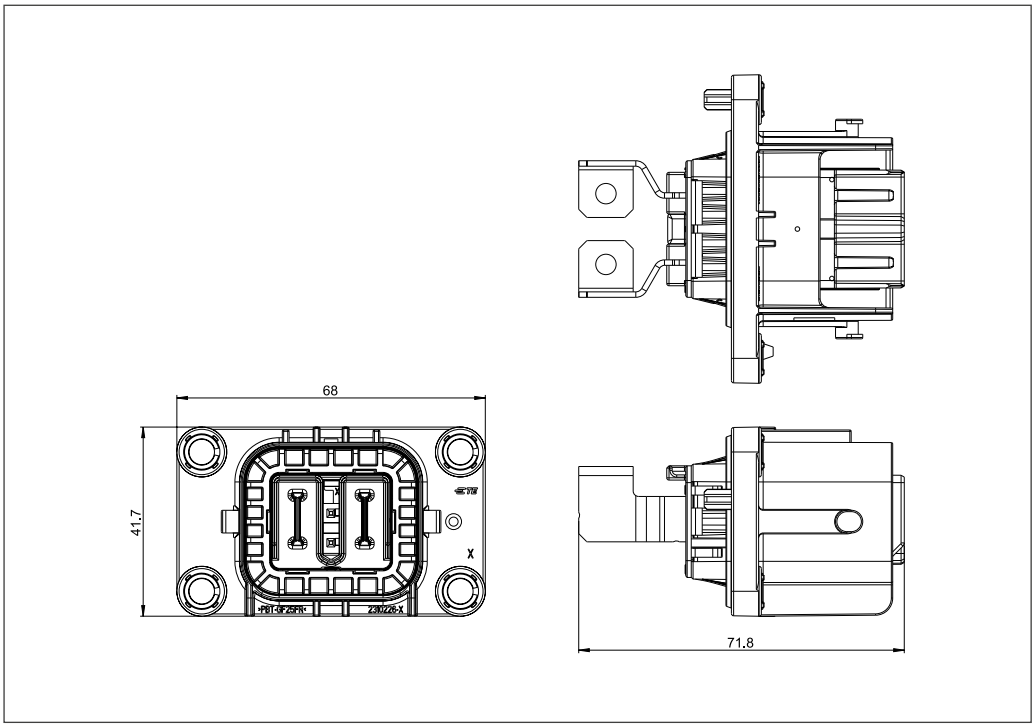

Drawing 2310224 *

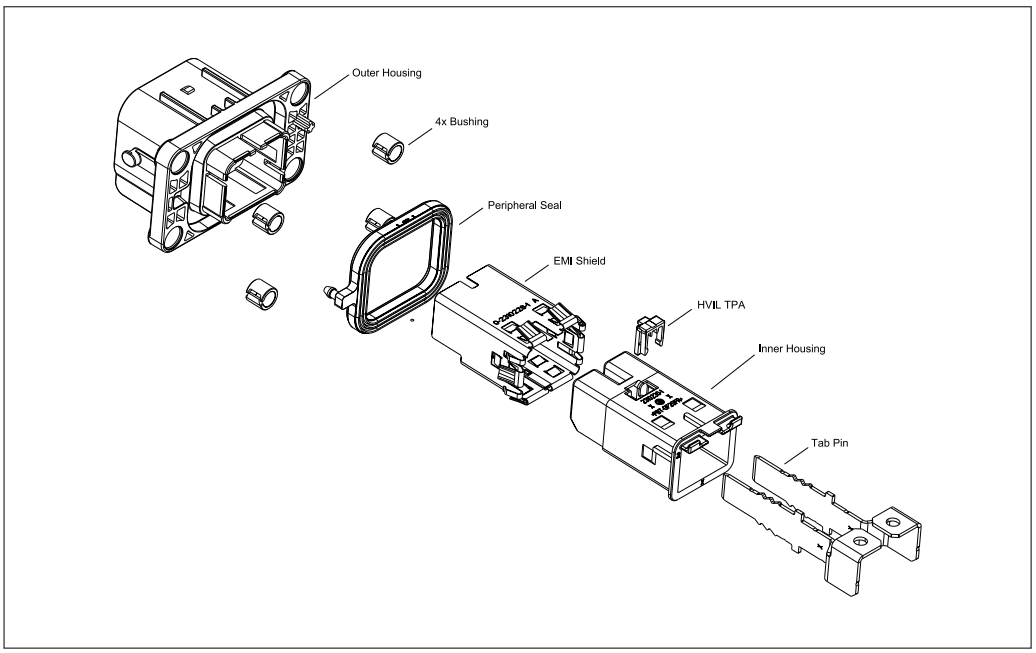

* Drawing number is NOT the order number!

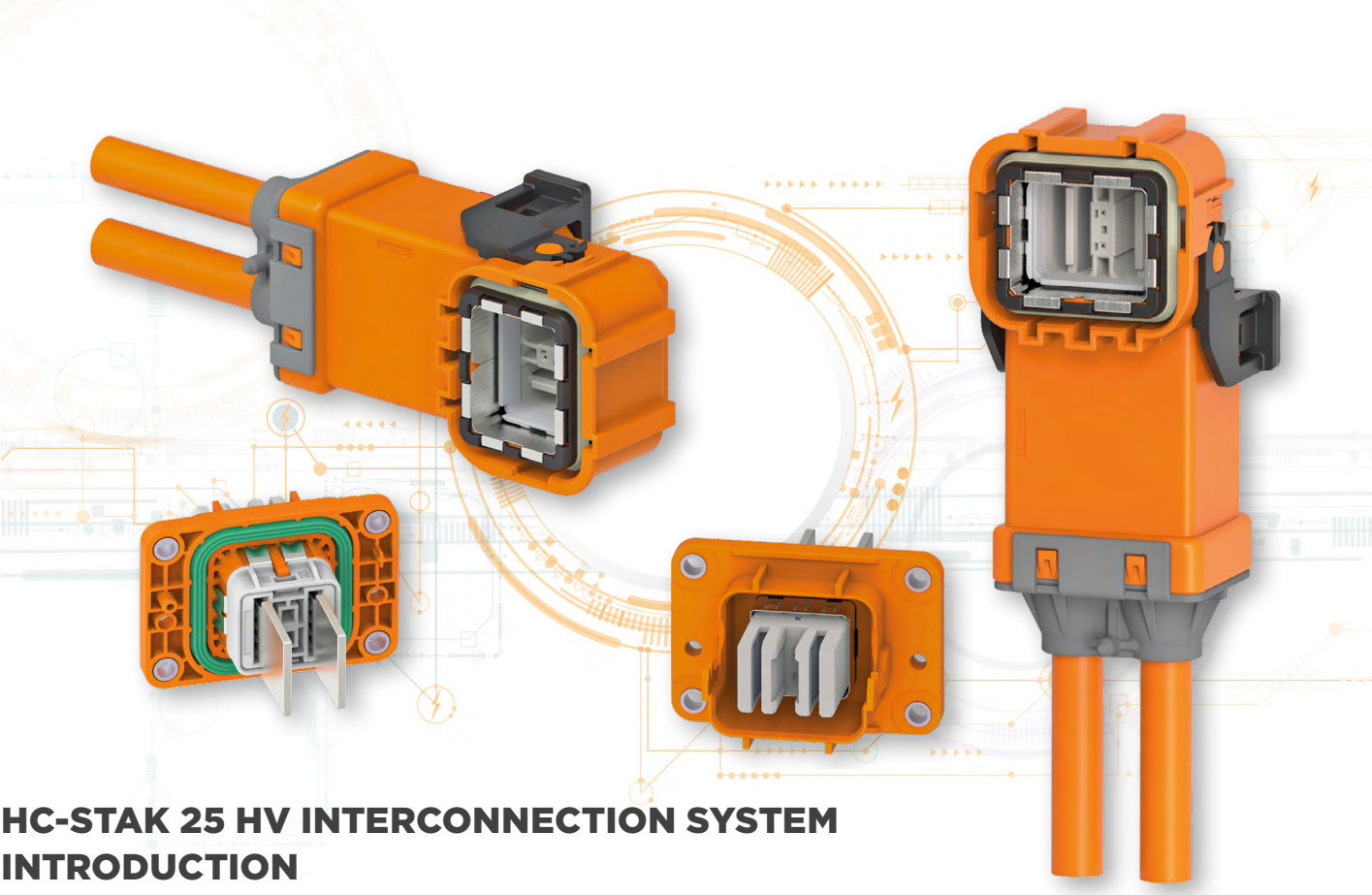

HC-STAK 25 HV INTERCONNECTION SYSTEM INTRODUCTION

With a voltage rating of up to 1,000 VDC and a current carrying capability of up to 257 A at 85°C (50 mm^2) the HC-STAK 25 HV interconnection system is specifically designed to provide a safer and reliable connection between the HV battery and the inverter or the power distribution and e-motor.

The HC-STAK 25 HV interconnection system features a high performance interconnection system that is both scalable and capable of reliable high-power distribution to each aggregate throughout the lifetime of the vehicle. A noteworthy double ended-fork terminal system provides a low contact resistance arrangement while meeting sealing, shielding, and touch-safe requirements in a very compact package. It has the flexibility to interconnect with a wide range of conductor cross-sections, geometry, and materials.

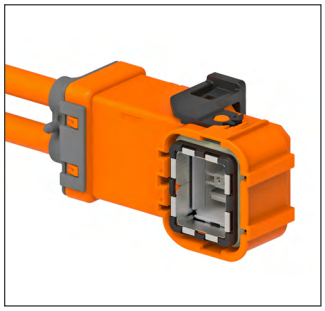

Applications

- Inverter
- HV Battery
- E-motor

Technical Features

Poles:
2

Terminal Size / System:
2.5 mm / Fork contact

Conductor Cross-Sections:
25 mm^2 to 50 mm^2

Wire Type:
Shielded

Tab Size:
42.4 mm x 2.5 mm x 23 mm

Voltage Rating:
1,000 VDC

Temperature Range:
-40°C up to 125°C

Current Carrying Capability:
Derating factor of 10%
257 A at 85°C (50 mm^2)

IP Rating, Mated:
IP6K7, IP6K9K

IP Rating, Unmated:
IP2XB

HV Interlock Option:
Shunted in Plug

Latch Access Type:
Lever

CPA:
Yes

Fire Classification:
V0 (Inner Housing)

Vibration Level:
USCAR-2 Class V1

Shielding / Options:
Yes

Available Codings:
A, B

Product Specification:
108-160108

Application Specification:
114-162001

HC-STAK 25 2p hi – Plug 90°

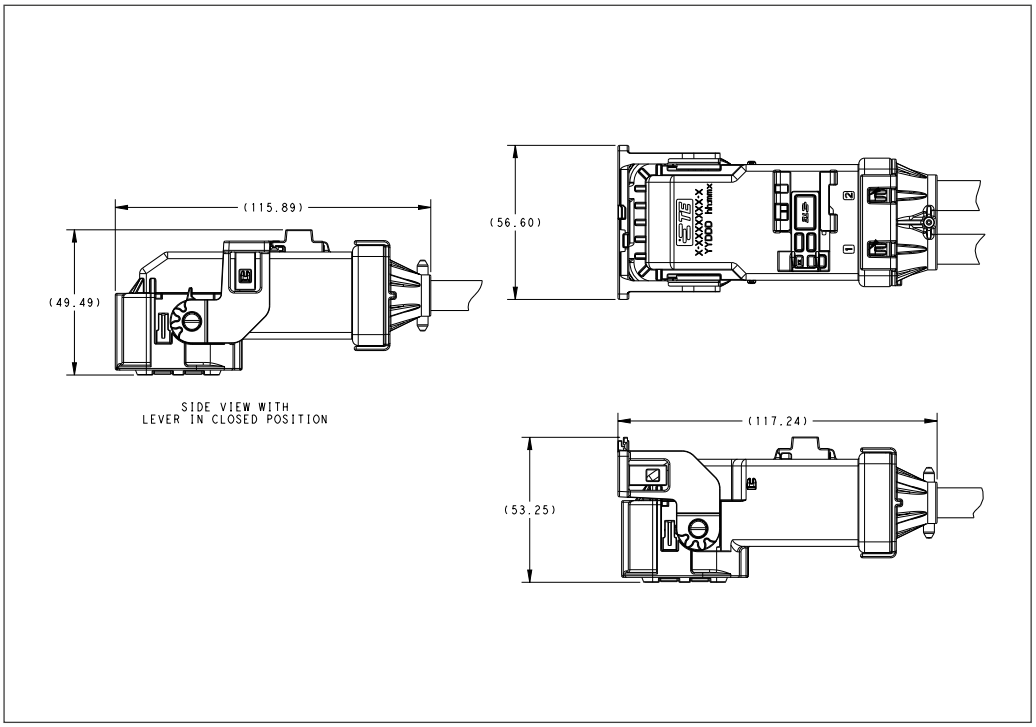

Drawing 2349157 *

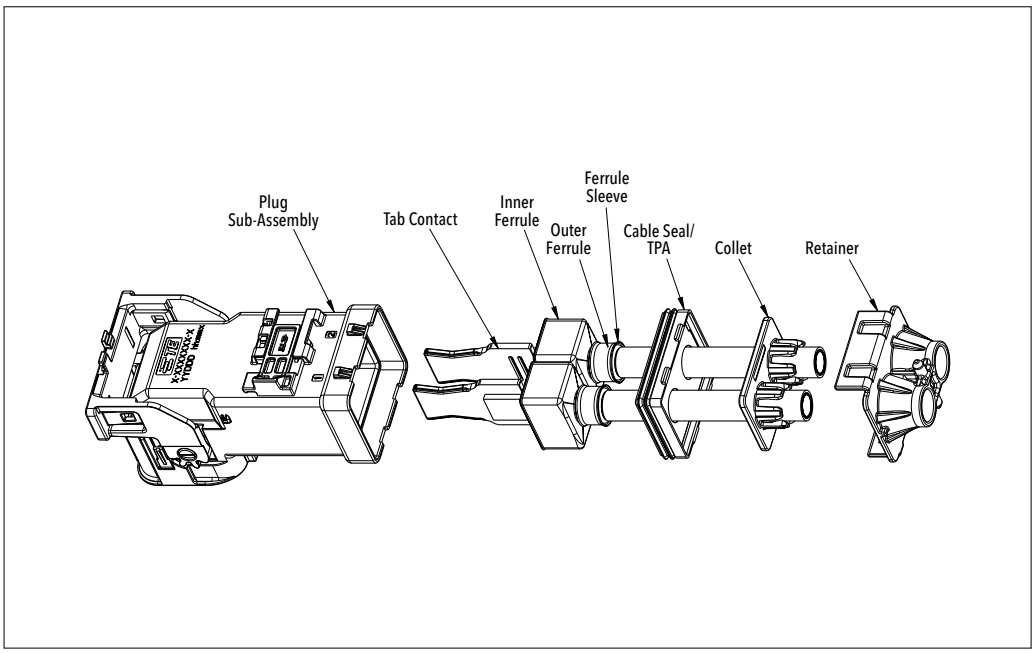

* Drawing number is NOT the order number!

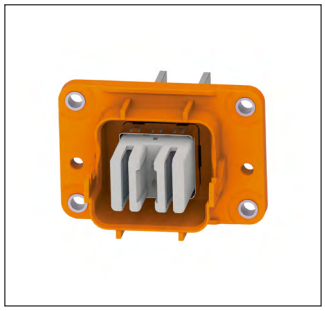

HC-STAK 25 2p hi – Header

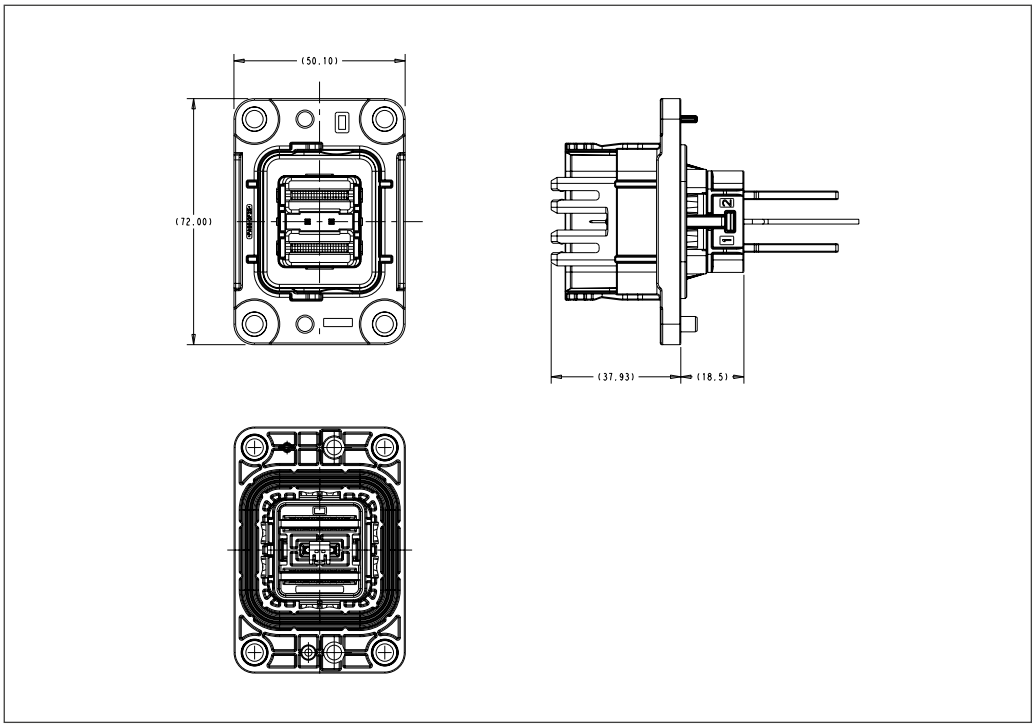

Drawing 2379307 *

Applications

- Inverter
- HV Battery
- E-motor

Technical Features

Poles:
2

Terminal Size / System:
2.5 mm / Fork contact

Conductor Cross-Sections:
25 mm^2 to 50 mm^2

Wire Type:
Shielded

Voltage Rating:
1,000 VDC

Temperature Range:
-40°C up to 125°C

Current Carrying Capability:
Derating factor of 10%
257 A at 85°C (50 mm^2)

IP Rating, Mated:
IP6K7, IP6K9K

IP Rating, Unmated:
IP2XB

HV Interlock Option:
Yes

Latch Access Type:
Lever

Fire Classification:
V0

Vibration Level:
USCAR-2 Class V1

Shielding / Options:
Yes

Available Codings:
A, B

Product Specification:
108-160108

Application Specification:
408-160030

Inner Housing:
2359563-1

Interface Drawing:
2343034

* Drawing number is NOT the order number!

NOTES

AMP+ HVP 800 HV INTERCONNECTION SYSTEM INTRODUCTION

The AMP+ HVP 800 HV interconnection system features a robust design that optimizes package size and plug and header selections to create multiple wire harness assembly routing options for currents up to 225 A at 85°C (50 mm²).

The system includes touch-proof one-, two-, or three-pole connectors and headers engineered with 90° and 180° plugs with integrated internal HVIL function and EMI shielding. Assembly is simplified with a lever assist for low insertion force.

A wide temperature and wire range, as well as multiple coding options qualify it for use in many hybrid and electric vehicle applications such as inverter, HV battery and under certain conditions e-motor applications.

Naming Convention
HVP 800 Interconnection System

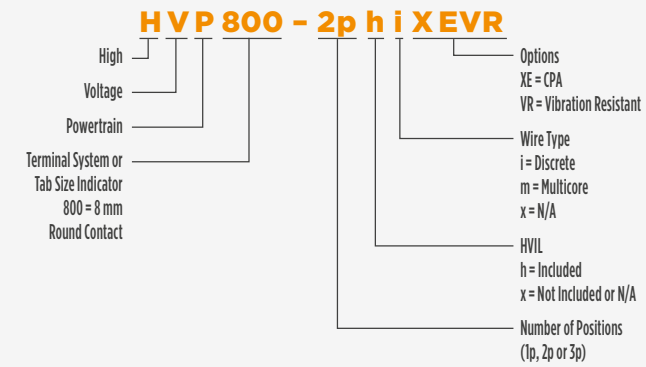

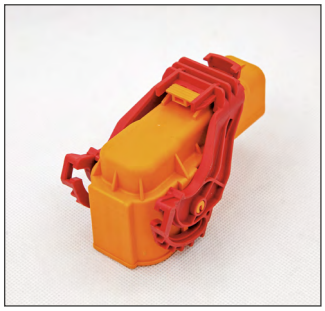

Applications

- Inverter
- HV Battery
- E-motor

Technical Features

Poles:
1

Terminal Size / System:
8 mm round

Conductor Cross-Sections:
16 mm^2 to 50 mm^2

Wire Type:
Single-core

Voltage Rating:
650 VDC / 850 VDC

Temperature Range:
-40°C up to 125°C

Current Carrying Capability:
225 A at 85°C (50 mm^2)

IP Rating, Mated:
IP67, IP6K9K, IPXXD

IP Rating, Unmated:
IPXXB

HV Interlock Option:
Shunted in plug

CPA:
Yes

Fire Classification:
V0

Vibration Level:
SG 2 (LV 215-1)

Shielding / Options:
Yes

EMC Shielding Resistance:
10 mΩ

Available Codings:
A, B, C, D, E, F

Product Specification:
108-101439

Application Specification:
114-101062

AMP+ HVP 800 1p hi XE – Plug 90°

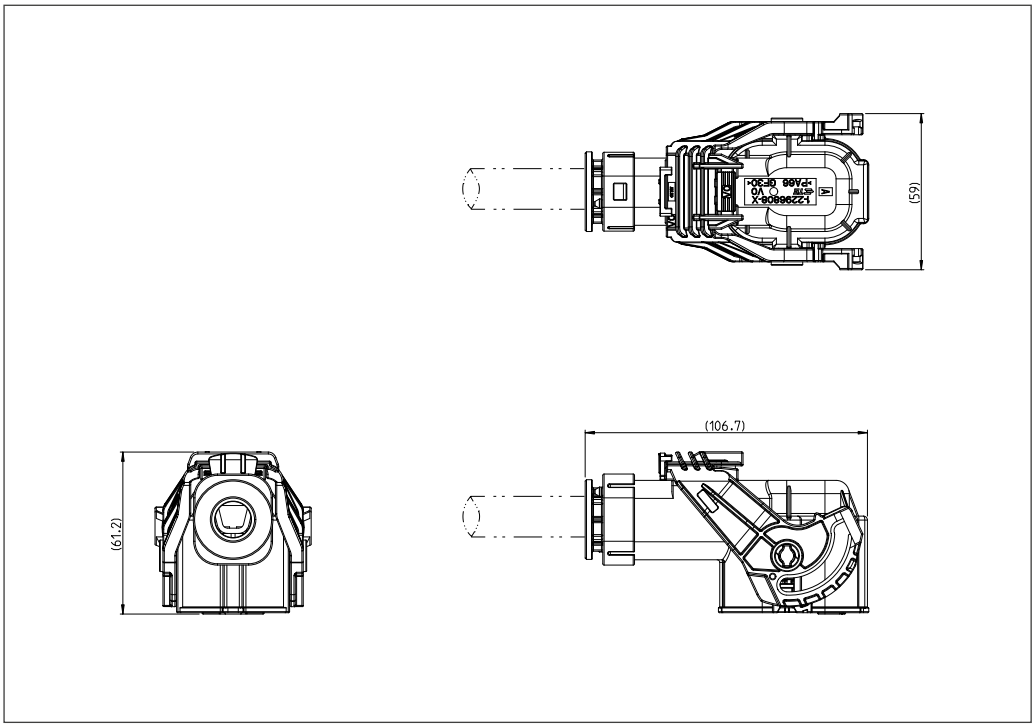

Drawing 2324136 *

Cable Direction	Cable Size	Part Number
90°	50 mm^2	2324136-X
	35 mm^2	1-2324136-X
	25 mm^2	2-2324136-X
	16 mm2	in planning

Note: X = 1~6, Coding = A~F

* Drawing number is NOT the order number!

Applications

- Inverter
- HV Battery
- E-motor

Technical Features

Poles:
1

Terminal Size / System:
8.0 mm round contact

Conductor Cross-Sections:
16 mm^2 to 50 mm^2

Wire Type:
Single-core

Voltage Rating:
1,000 VDC

Temperature Range:
-40°C up to 125°C

Current Carrying Capability:
225 A at 85°C (50 mm^2)

IP Rating, Mated:
IP67, IP6K9K, IPXXD

IP Rating, Unmated:
IPXXB

HV Interlock Option:
Shunted in plug

CPA:
Yes

Fire Classification:
V0

Vibration Level:
SG 2 (LV 215-1)

Shielding / Options:
Yes

EMC Shielding Resistance:
10 mΩ

Available Codings:
A, B, C, D, E, F

Product Specification:
108-101481

Application Specification:
114-101063

AMP+ HVP 800 1p hi XE – Plug 180°

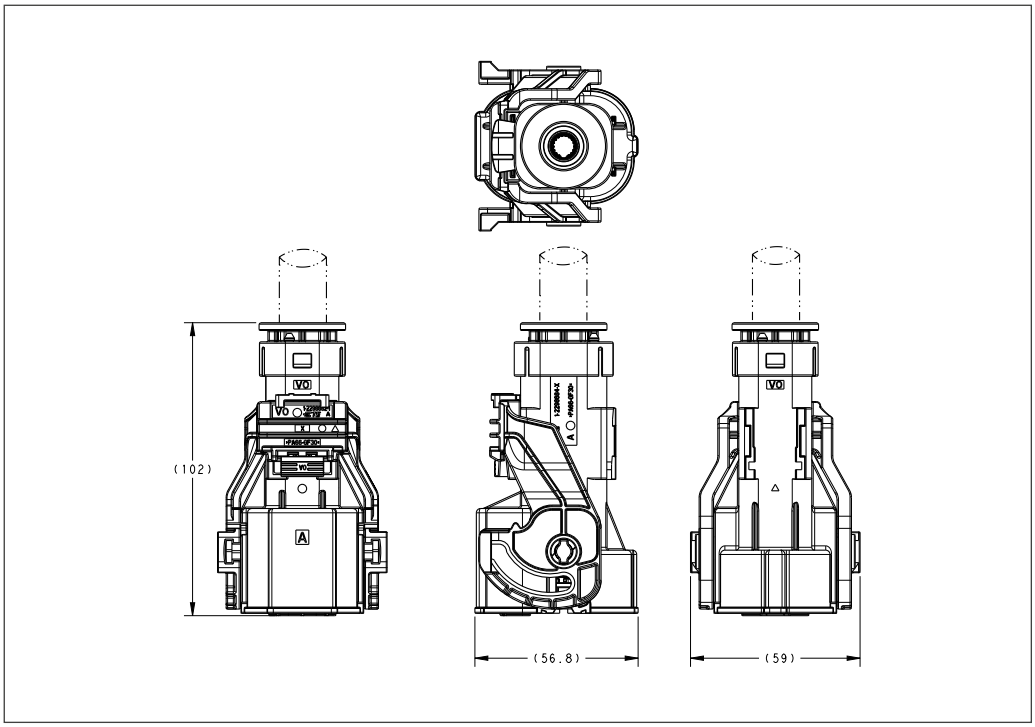

Drawing 2324086 *

Cable Direction	Lever Orientation	Cable Size	Part Number
180°	Normal	50 mm^2	2324086-X
		35 mm^2	2-2324086-X
		25 mm^2	4-2324086-X
	Reverse	50 mm^2	1-2324086-X
		35 mm^2	3-2324086-X
		25 mm^2	5-2324086-X
		16 mm^2	in planning

Note: X = 1~6, Coding = A~F

* Drawing number is NOT the order number!

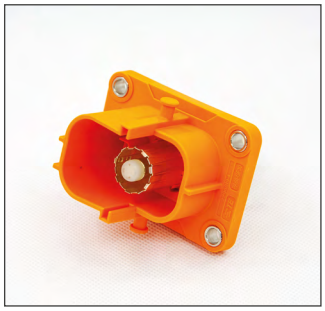

Applications

- Inverter
- HV Battery
- E-motor

Technical Features

Poles:
1

Conductor Cross-Sections:
16 mm^2 to 50 mm^2

Tab Size:
8 mm round

Voltage Rating:
1,000 VDC

Temperature Range:
-40°C up to 125°C

Current Carrying Capability:
225 A at 85°C (50 mm^2)

IP Rating, Mated:
IP67, IP6K9K

IP Rating, Unmated:
IPXXB

HV Interlock Option:
Shunted in plug

Fire Classification:
V0

Vibration Level:
SG 2 (LV 215-1)

Shielding / Options:
Yes

EMC Shielding Resistance:
10 mΩ

Available Codings:
A, B, C, D, E, F

Product Specification:
108-101439; 108-101481

AMP+ HVP 800 1p hi – Header

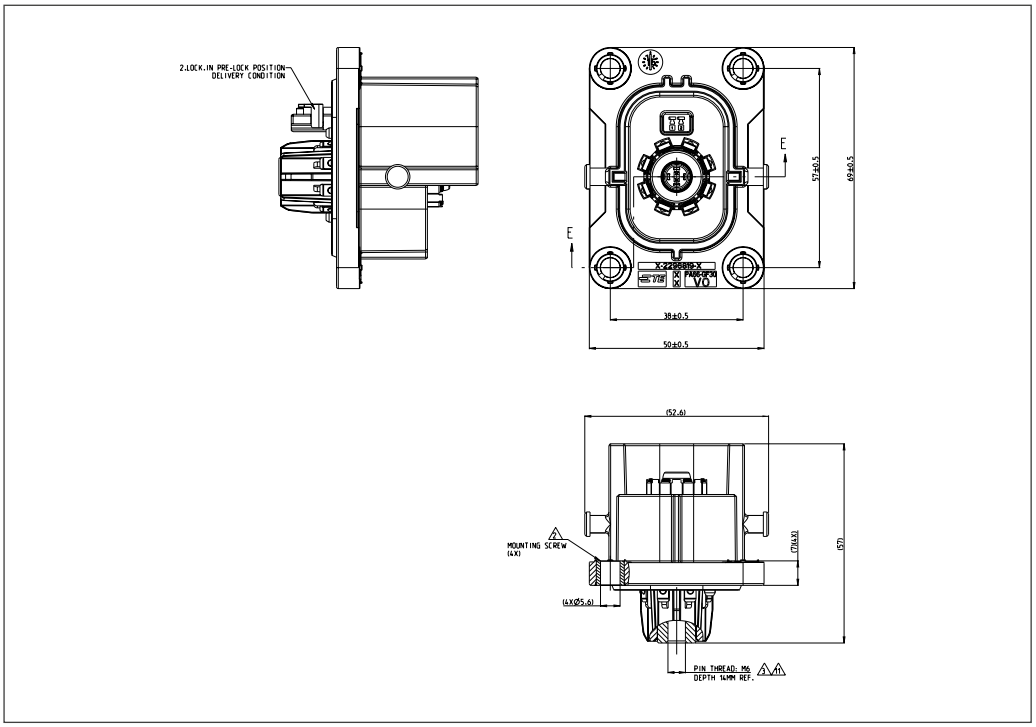

Drawing 2324108 *

Busbar Nut Size	Shipping Cap	Part Number
None	No	2324108-X
	Yes	2-2324108-X
M8	No	4-2324108-X
	Yes	5-2324108-X

Note: X = 1~6, Coding = A~F

* Drawing number is NOT the order number!

Applications

- Inverter
- HV Battery
- E-motor

Technical Features

Terminal Size / System:
8.0 mm round contact

Conductor Cross-Sections:
16 mm^2 to 50 mm^2

Wire Type:
Single-core

Voltage Rating:
650 VDC / 850 VDC

Temperature Range:
-40°C up to 140°C

Current Carrying Capability:
225 A at 85°C (50 mm^2)

IP Rating, Mated:
IP67, IP6K9K

IP Rating, Unmated:
IPXXB

HV Interlock Option:
Shunted in plug

CPA:
Yes

Fire Classification:
HB, V0

Vibration Level:
SG 2 (LV 215-1)

Shielding / Options:
Yes

EMC Shielding Resistance:
10 mΩ

Available Codings:
A, B, C, D

Product Specification:
108-94268

Application Specification:
114-94052

AMP+ HVP 800 2p hi XE – Plug 90°

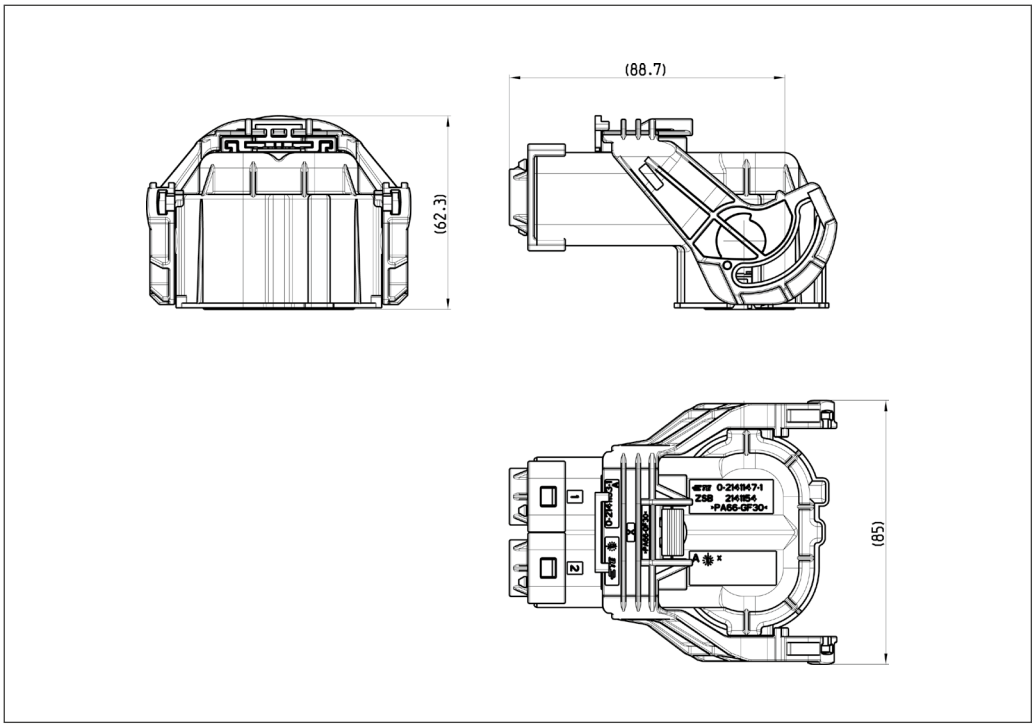

Drawing 2282334 *

Version (Cable Dimension)		Coding	With CPA	With Lever	Order Information
25 / 35 / 50 mm² (acc. LV 216-2)	released	A	✔	✔	To be ordered see drawing!
		B	✔	✔	
		C	✔	✔	
		D	✔	✔	
16 mm²	in planning				

* Drawing number is NOT the order number!

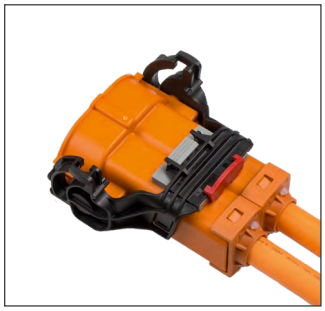

Applications

- Inverter
- HV Battery
- E-motor

Technical Features

Poles:
2

Terminal Size / System:
8.0 mm round contact

Conductor Cross-Sections:
16 mm^2 to 50 mm^2

Wire Type:
Single-core

Voltage Rating:
1,000 VDC

Temperature Range:
-40°C up to 140°C

Current Carrying Capability:
225 A at 85°C (50 mm^2)

IP Rating, Mated:
IP6K9K

IP Rating, Unmated:
IPXXB

HV Interlock Option:
Shunted in plug

CPA:
Yes

Fire Classification:
HB, V0

Vibration Level:
SG 2 (LV 215-1)

Shielding / Options:
Yes

EMC Shielding Resistance:
10 mΩ

Available Codings:
A, B, C, D

Product Specification:
108-94297

Application Specification:
114-94130

AMP+ HVP 800 2p hi XE – Plug 180°

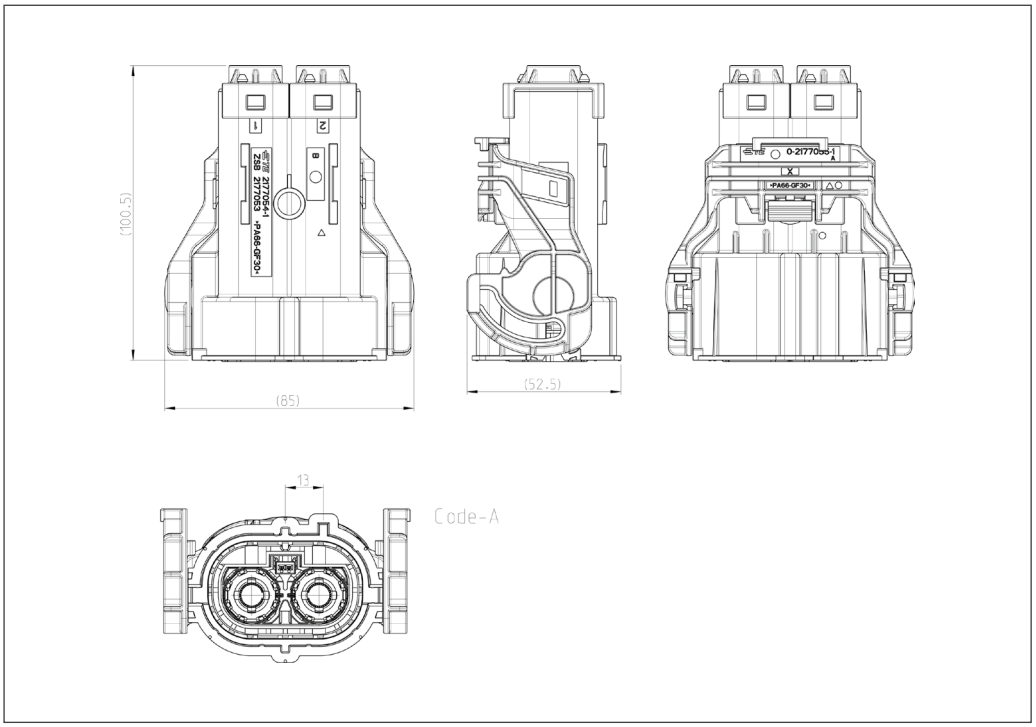

Drawing 2177052 *

Version (Cable Dimension)		Coding	With CPA	With Lever	Order Information
25 / 35 / 50 mm² (acc. LV 216-2)	released	A	✔	✔	To be ordered see drawing!
		B	✔	✔	
		C	✔	✔	
		D	✔	✔	
16 mm²	in planning				

* Drawing number is NOT the order number!

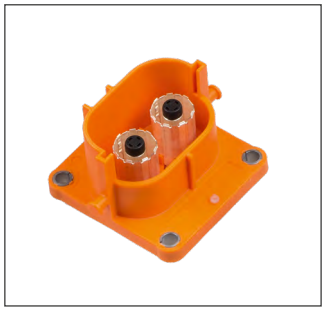

AMP+ HVP 800 2p hi – Header

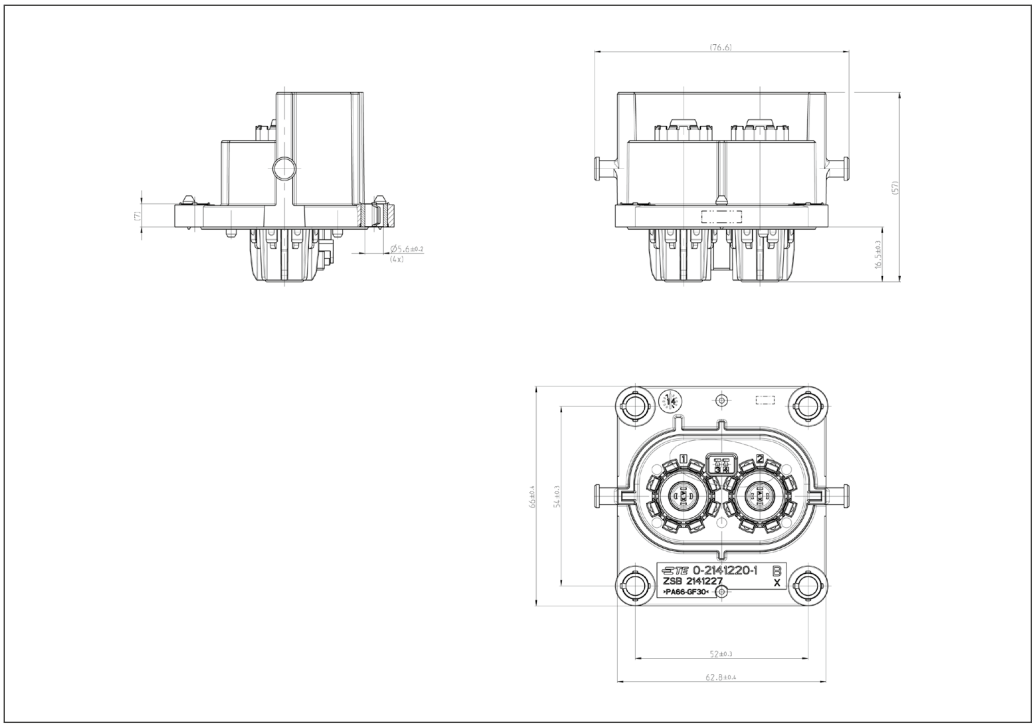

Drawing 2141227 *

Applications

- Inverter
- HV Battery
- E-motor

Technical Features

Poles:
2

Tab Size:
8 mm round

Voltage Rating:
1,000 VDC

Temperature Range:
-40°C up to 140°C

Current Carrying Capability:
225 A at 85°C (50 mm^2)

IP Rating, Mated:
IP6K9K

IP Rating, Unmated:
IP2XB (touch safe)

HV Interlock Option:
Shunted in plug

Fire Classification:
HB, V0

Vibration Level:
SG 2 (LV 215-1)

Shielding / Options:
Yes

EMC Shielding Resistance:
10 mΩ

Available Codings:
A, B, C, D

Product Specification:
108-94268; 108-94297

Application Specification:
114-94153

Interface Drawing:
114-94034

Interface Drawing Adapter Plate:
114-94032

Version (Cable Dimension)		Coding	Order Information
one for all	released	A	To be ordered see drawing!
		B	
		C	
		D	

* Drawing number is NOT the order number!

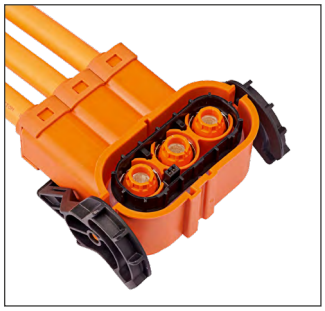

Applications

- Inverter
- HV Battery
- E-motor

Technical Features

Terminal Size / System:
8.0 mm round contact

Conductor Cross-Sections:
16 mm² to 50 mm²

Wire Type:
Single-core

Voltage Rating:
650 VDC / 850 VDC / 1,000 VDC

Temperature Range:
-40°C up to 140°C

Current Carrying Capability:
225 A at 85°C (50 mm²)

IP Rating, Mated:
IP6K9K

IP Rating, Unmated:
IPXXB

HV Interlock Option:
Shunted in plug

CPA:
Yes

Fire Classification:
HB

Vibration Level:
SG 2 (LV 215-1)

Shielding / Options:
Yes

EMC Shielding Resistance:
10 mΩ

Available Codings:
A, B, C, D

Product Specification:
108-94268

Application Specification:
114-94052

AMP+ HVP 800 3p hi XE – Plug 90°

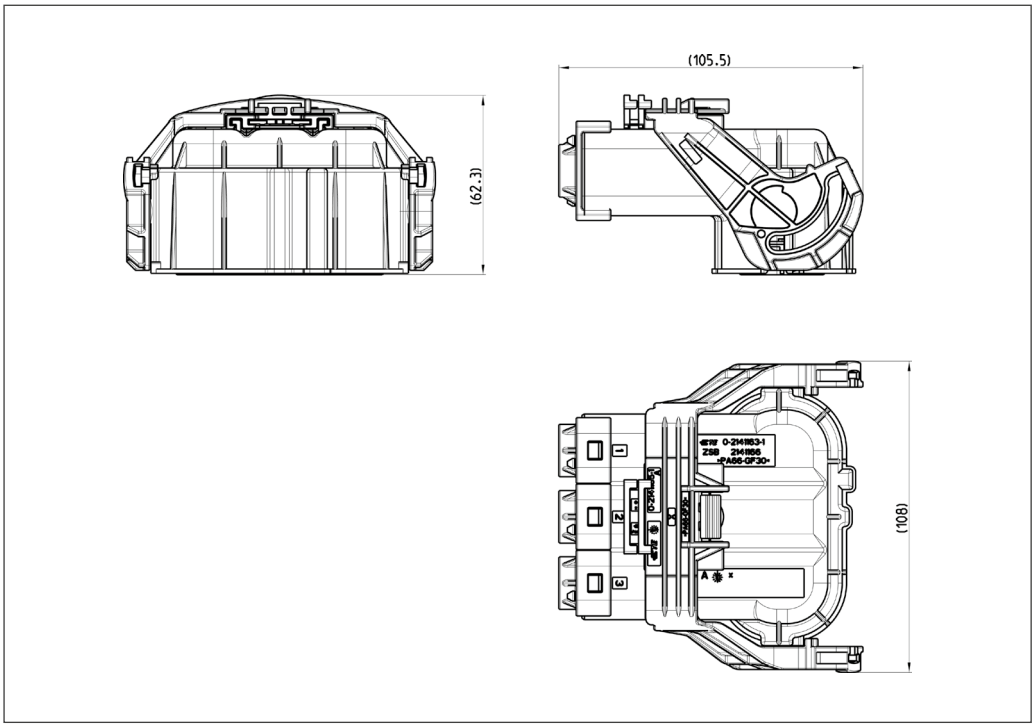

Drawing 2282335 *

Version (Cable Dimension)		Coding	With CPA	With Lever	Order Information
25 / 35 / 50 mm² (acc. LV 216-2)	released	A	✔	✔	To be ordered see drawing!
		B	✔	✔	
		C	✔	✔	
		D	✔	✔	
16 mm²	in planning				

* Drawing number is NOT the order number!

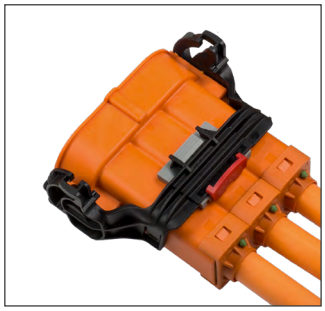

Applications

- Inverter
- HV Battery
- E-motor

Technical Features

Poles:

Terminal Size / System:
8.0 mm round contact

Conductor Cross-Sections:
16 mm² to 50 mm²

Wire Type:
Single-core

Voltage Rating:
850 VDC / 1,000 VDC

Temperature Range:
-40°C up to 140°C

Current Carrying Capability:
225 A at 85°C (50 mm²)

IP Rating, Mated:
IP6K9K

IP Rating, Unmated:
IPXXB

HV Interlock Option:
Shunted in plug

CPA:
Yes

Fire Classification:
HB

Vibration Level:
SG 2 (LV 215-1)

Shielding / Options:
Yes

EMC Shielding Resistance:
10 mΩ

Available Codings:
A, B

Product Specification:
108-94297

Application Specification:
114-94130

AMP+ HVP 800 3p hi XE – Plug 180°

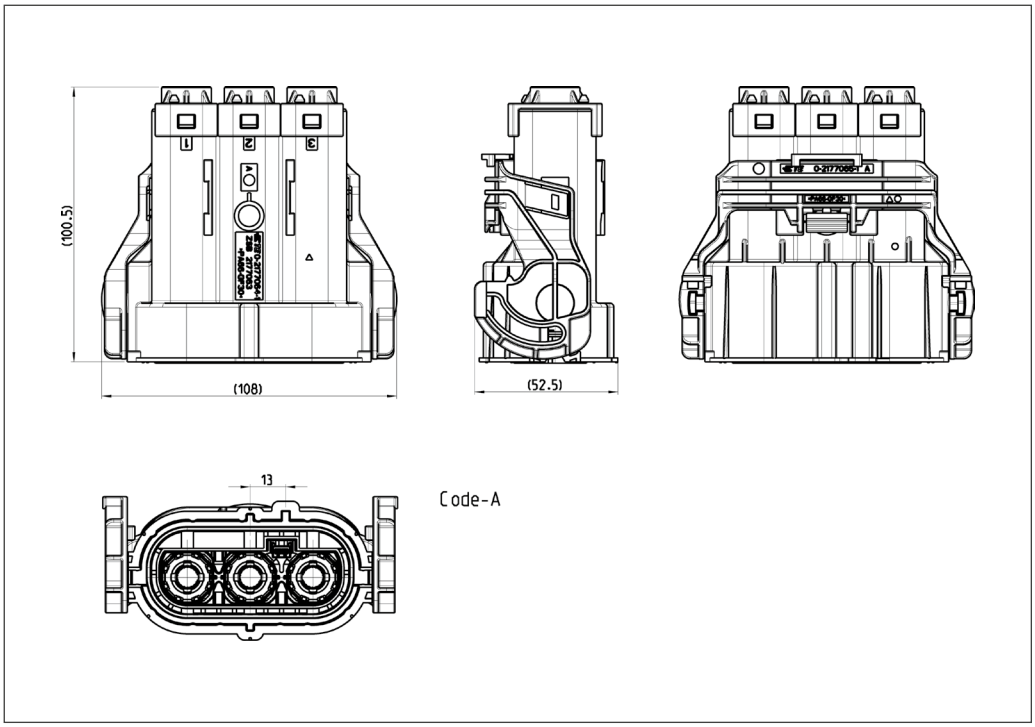

Drawing 2177062 *

Version (Cable Dimension)		Coding	With CPA	With Lever	Order Information
25 / 35 / 50 mm² (acc. LV 216-2)	released	A	✔	✔	To be ordered see drawing!
		A	✔	✔	
		B	✔	✔	
		B	✔	✔	
16 mm²	in planning				

* Drawing number is NOT the order number!

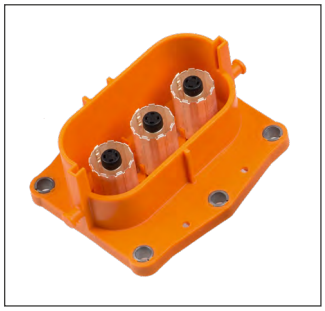

Applications

- Inverter
- HV Battery
- E-motor

Technical Features

Poles:
3

Tab Size:
8 mm round

Voltage Rating:
1,000 VDC

Temperature Range:
-40°C up to 140°C

Current Carrying Capability:
225 A at 85°C (50 mm^2)

IP Rating, Mated:
IP67, IP6K9K

IP Rating, Unmated:
IP2XB (touch safe)

HV Interlock Option:
Shunted in plug

Fire Classification:
HB

Vibration Level:
SG 2 (LV 215-1)

Shielding / Options:
Yes

EMC Shielding Resistance:
10 mΩ

Available Codings:
A, B, C, D

Product Specification:
108-94268; 108-94297

Application Specification:
114-94153

Interface Drawing:
114-94034

Interface Drawing Adapter Plate:
114-94032

AMP+ HVP 800 3p hi – Header

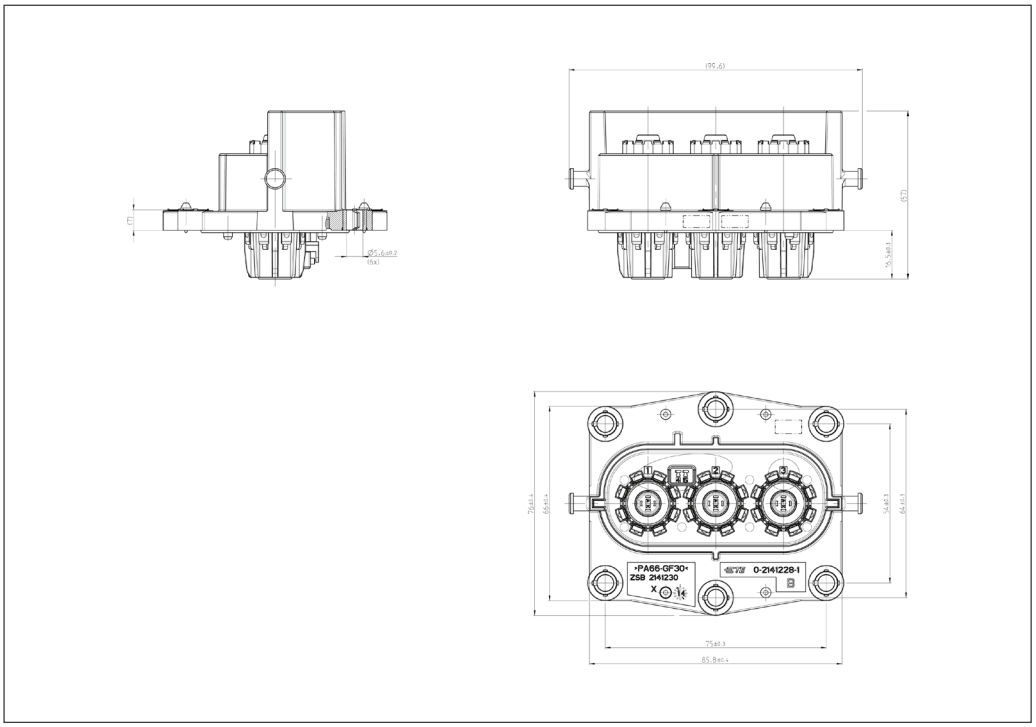

Drawing 2141230 *

Version (Cable Dimension)		Coding	Order Information
one for all	released	A	To be ordered see drawing!
		B	
		C	
		D	

* Drawing number is NOT the order number!

AMP+ HVP 800 Connector System Kits

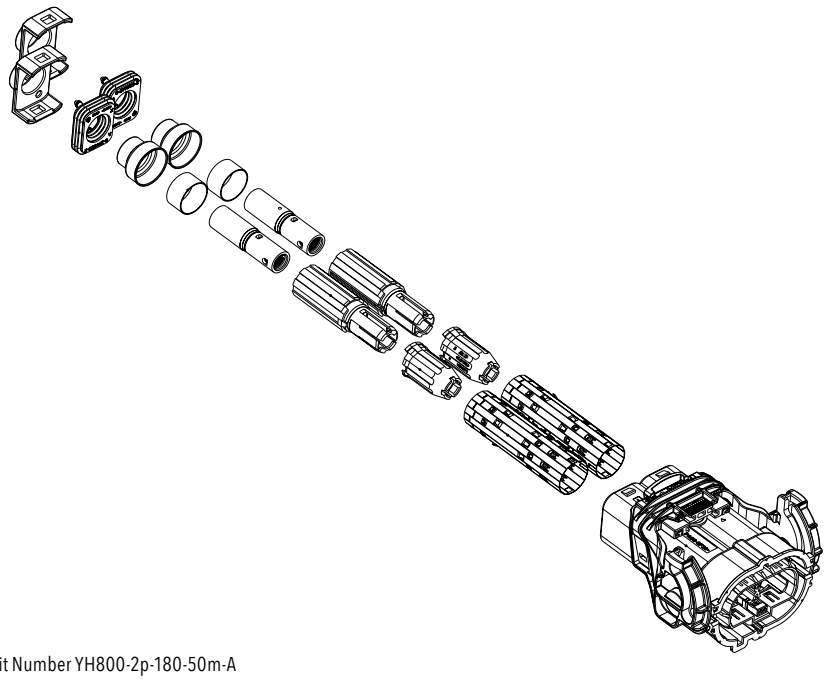

Example: Kit Number YH800-2p-180-50m-A

AMP+ HVP 800 Connector System Kits *)

Connector	Position	Cable (mm^2)	Mating Orientation	Key	LADD Connector Kit Number	Mating Header Part Number	LADD Header Kit Number
HVP 800	2	50	90°	A	YHV800-2p-90-50m-A	2141227-1	YHVA800-2P-HDR-A-0
				B	YHV800-2p-90-50m-B	2141227-2	YHVA800-2P-HDR-B-0
			180°	A	YH800-2p-180-50m-A	2141227-1	YHVA800-2P-HDR-A-0
				B	YH800-2p-180-50m-B	2141227-2	YHVA800-2P-HDR-B-0
	3	50	90°	A	YHV800-3p-90-50m-A	2141230-1	YHVA800-3p-hdr-A-0
				B	YHV800-3p-90-50m-B	2141230-2	YHVA800-3p-hdr-B-0
			180°	A	YH800-3p-180-50m-A	2141230-1	YHVA800-3p-hdr-A-0
				B	YH800-3p-180-50m-B	2141230-2	YHVA800-3p-hdr-B-0

*) Kits include HVIL terminals

NOTES

AMP+ HVP 1100 HV INTERCONNECTION SYSTEM INTRODUCTION

AMP+ HVP 1100 high-current interconnection system is a performant one-pole, finger proof and touch safe system. It is designed for flexibility and offers the options required for inverter, e-motor and HV battery applications.

The system provides a current carrying capability up to 300 A at 85°C (70 mm^2), and a cable range between 50 mm^2 and 70 mm^2 individually shielded wire. In addition it features an integrated internal HVIL for package size optimization.

Naming Convention
HVP 1100 Interconnection System

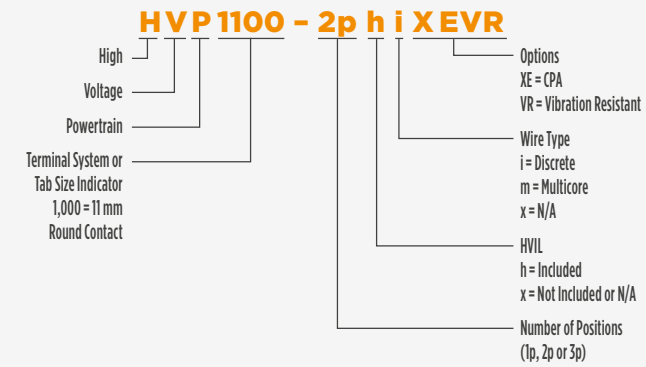

Applications

- Inverter
- HV Battery
- E-motor

Technical Features

Poles:
1

Terminal Size / System:
11 mm round contact

Conductor Cross-Sections:
70 mm²

Wire Type:
Single-core

Voltage Rating:
750 VDC

Temperature Range:
-40°C up to 125°C

Current Carrying Capability:
300 A at 85°C (70 mm²)

IP Rating, Mated:
IP6K7, IP6K9K

IP Rating, Unmated:
IP2XB

HV Interlock Option:
Integrated, Internal

CPA:
Yes

Fire Classification:
HB

Vibration Level:
USCAR-2 Class V1

Shielding / Options:
Yes

EMC Shielding Resistance:
10 mΩ

Available Codings:
A, B,C, D, E, F

Product Specification:
108-101203

Application Specification:
114-101010

AMP+ HVP 1100 1p hi XE – Plug 90°

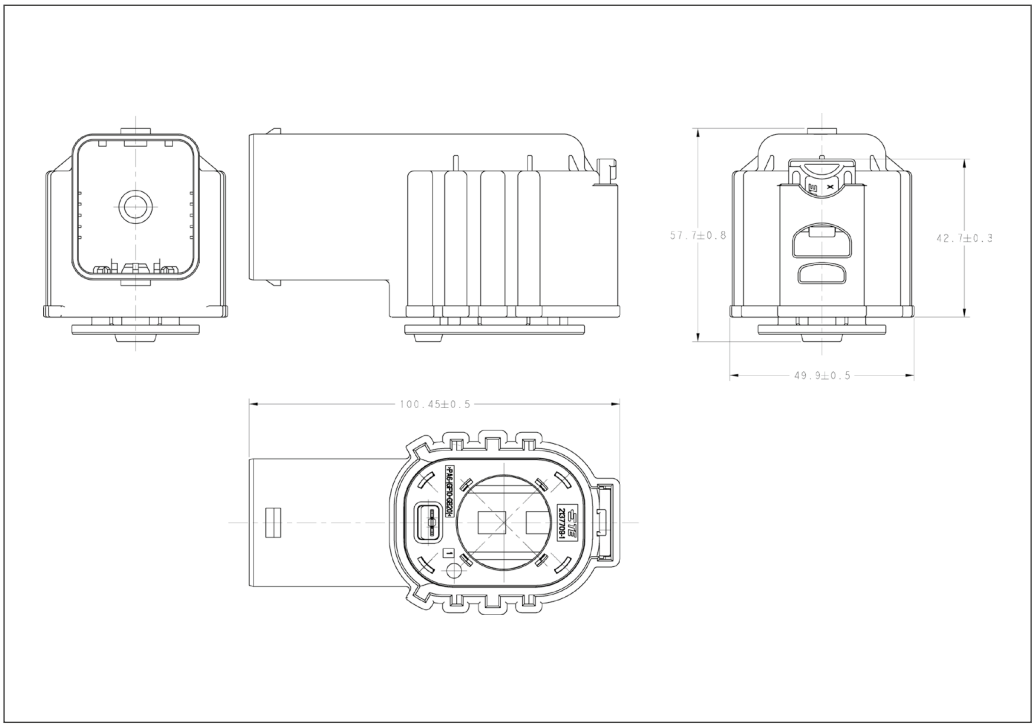

Drawing 2137704 *

Version (Cable Dimension)		Coding	Order Information
1 x 70 mm²	released	A	To be ordered see drawing!
	in planning	B	
	in planning	C	
	in planning	D	
	in planning	E	
	in planning	F	

* Drawing number is NOT the order number!

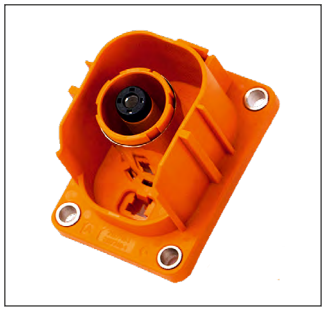

AMP+ HVP 1100 1p hi XE – Header

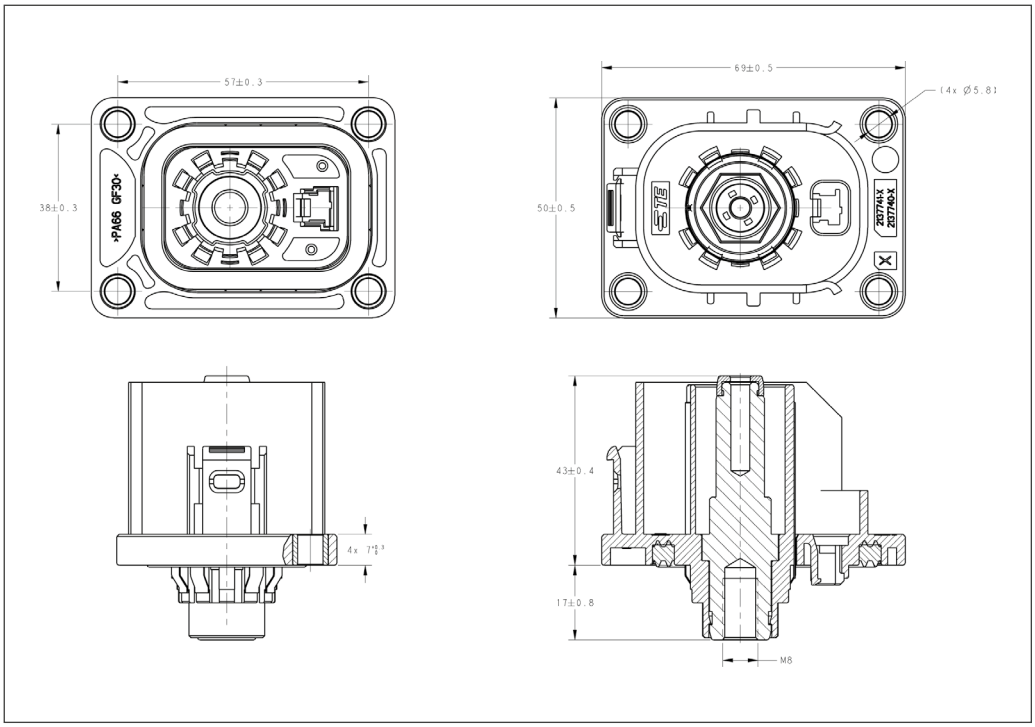

Drawing 2137740 *

Applications

- Inverter
- HV Battery
- E-motor

Technical Features

Poles:
1

Tab Size:
11 mm round

Voltage Rating:
750 VDC

Temperature Range:
-40°C up to 125°C

Current Carrying Capability:
300 A at 85°C (70 mm^2)

IP Rating, Mated:
IP6K7, IP6K9K

IP Rating, Unmated:
IP2XB

HV Interlock Option:
Integrated, Internal

Fire Classification:
HB

Vibration Level:
USCAR-2 Class V1

Shielding / Options:
Yes

EMC Shielding Resistance:
10 mΩ

Available Codings:
A, B, C, D, E, F

Product Specification:
108-101203

Application Specification:
114-101010

	Coding	Order Information
released	A	To be ordered see drawing!
in planning	B	
in planning	C	
in planning	D	
in planning	E	
in planning	F	

* Drawing number is NOT the order number!

AMP+ HVP 1100 Connector System Kits

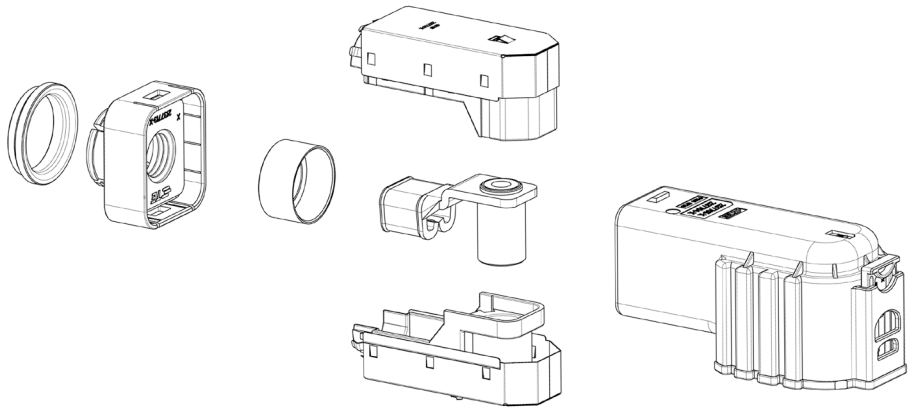

Example: Kit Number YHVP1100-1P-90-A-0

AMP+ HVP 1100 Connector System Kits *)

Connector	Position	Cable (mm^2)	Key	LADD Connector Kit Number	Mating Header Part Number	LADD Header Kit Number
HVP 1100	1	70	A	YHVP1100-1P-90-A-0	2137740-1	YHVP1100-1PH-HDR-A
			B	YHVP1100-1P-90-B-0	2137740-2	YHVP1100-1PH-HDR-B

*) Kits include HVIL terminals

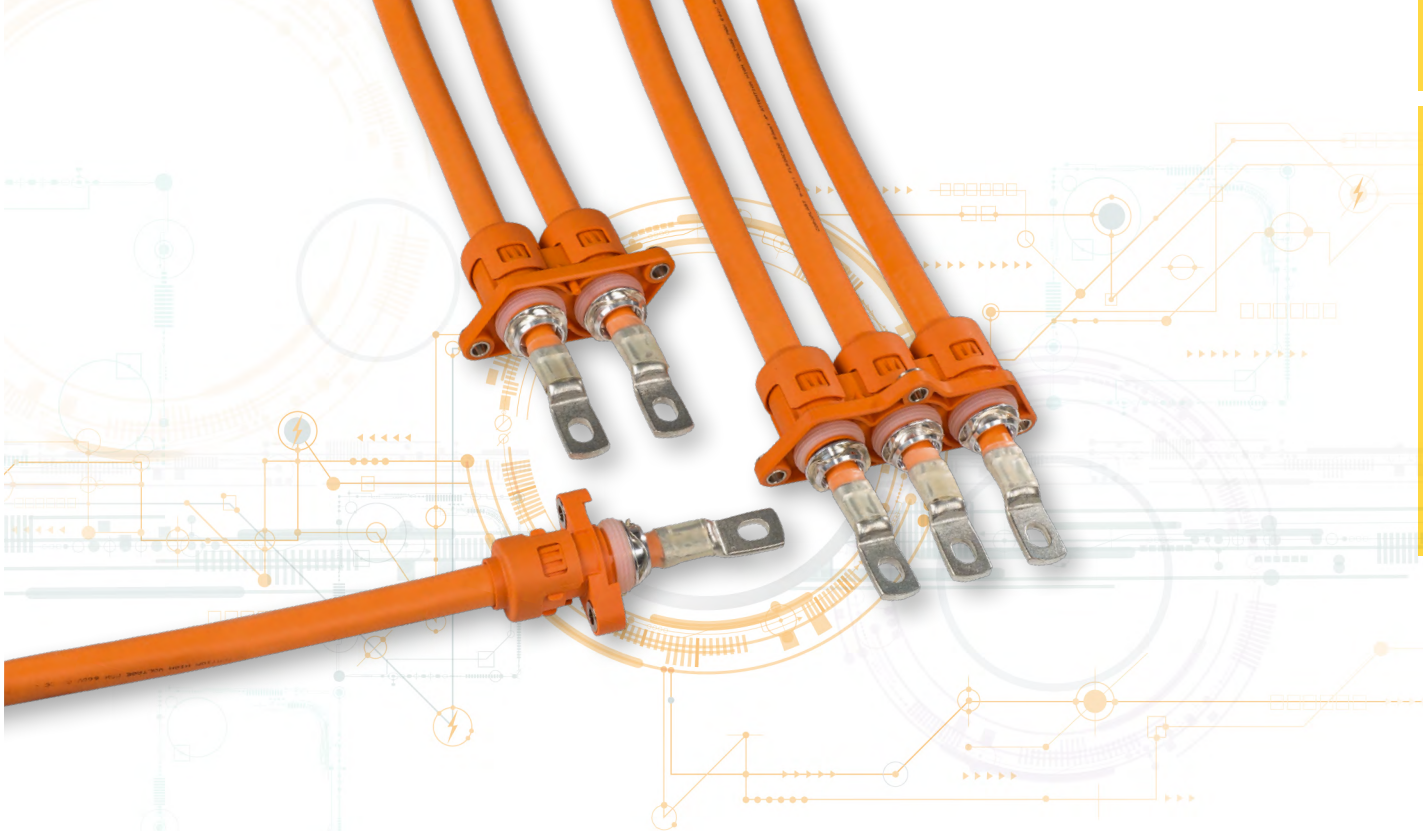

AMP+ IPT SHIELDED RING TONGUE TERMINAL INTRODUCTION

Our AMP+ IPT shielded ring tongue terminals are available in one-, two-, or three-pole housings and are suitable for applications in high vibration environments up to 290 A at 85°C (50 mm²). The power accessory provides 360° EMC shielding and wire-to-device capabilities. The screwed ring tongue can be applied on different length cables, according to the needs of the customer.

AMP+ IPT ring tongue terminals enable easy and flexible adaption to the various powertrain applications especially inverter, e-motor and HV battery applications.

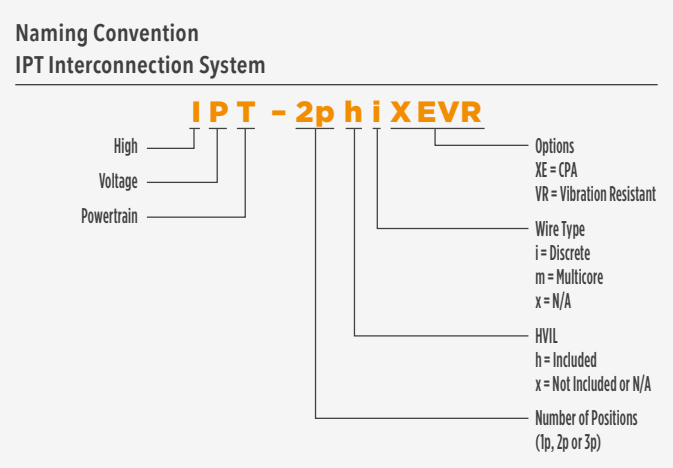

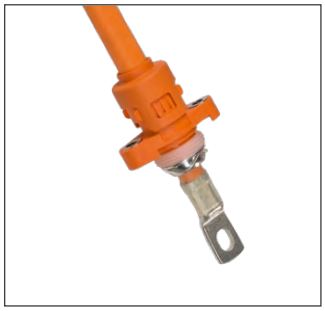

Applications

- Inverter
- HV Battery
- E-motor

Technical Features

Poles:
1

Terminal Size / System:
Ring tongue / Screwed

Conductor Cross-Sections:
16 mm² to 50 mm²

Wire Type:
Single-core

Voltage Rating:
1,000 VDC

Temperature Range:
-40°C up to 140°C

Current Carrying Capability:
290 A at 85°C (50 mm²)

IP Rating, Mated:
IP6K9K

HV Interlock Option:
No

CPA:
No

Fire Classification:
HB

Vibration Level:
SG 4 (LV 215-1)

Shielding / Options:
Yes

EMC Shielding Resistance:
10 mΩ

Available Codings:
A, B, C, D, E, F

Product Specification:
108-94293

Application Specification:
114-94133

Interface Drawing:
114-94132-1

AMP+ IPT 1p xi Shielded Ring Tongue Terminal

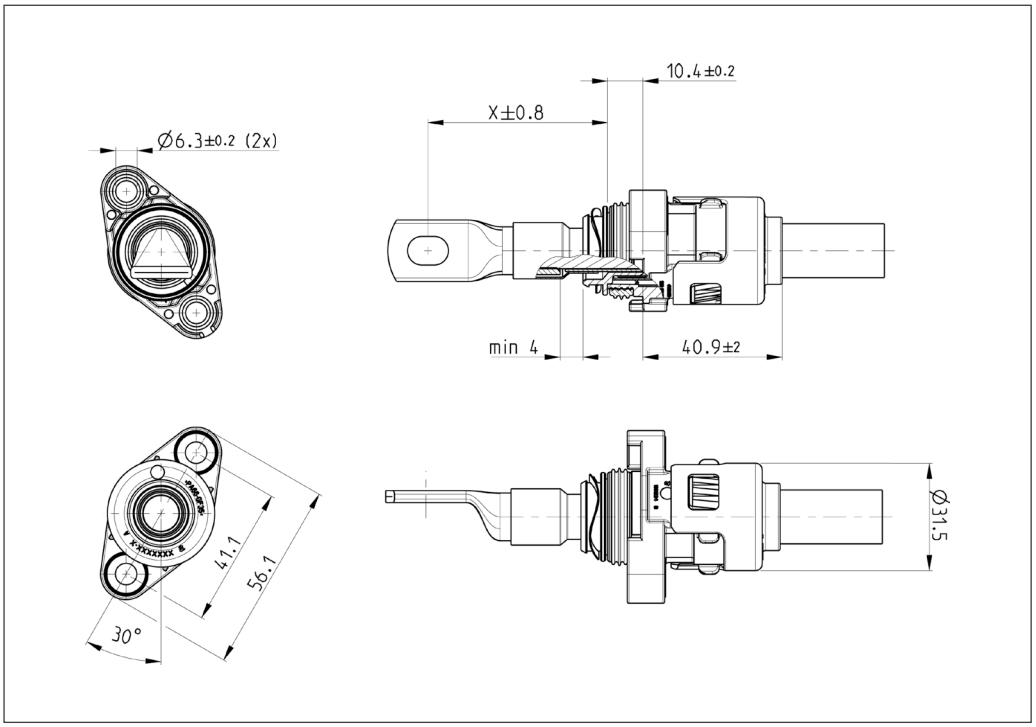

Drawing 114-94131-1 *

Version (Cable Dimension)		Coding	Order Information
25 / 35 / 50 mm² (acc. LV 216-2)	released	A	To be ordered see drawing!
		B	
		C	
		D	
		E	
		F	
16 mm²	in planning		

* Drawing number is NOT the order number!

AMP+ IPT 2p xi Shielded Ring Tongue Terminal

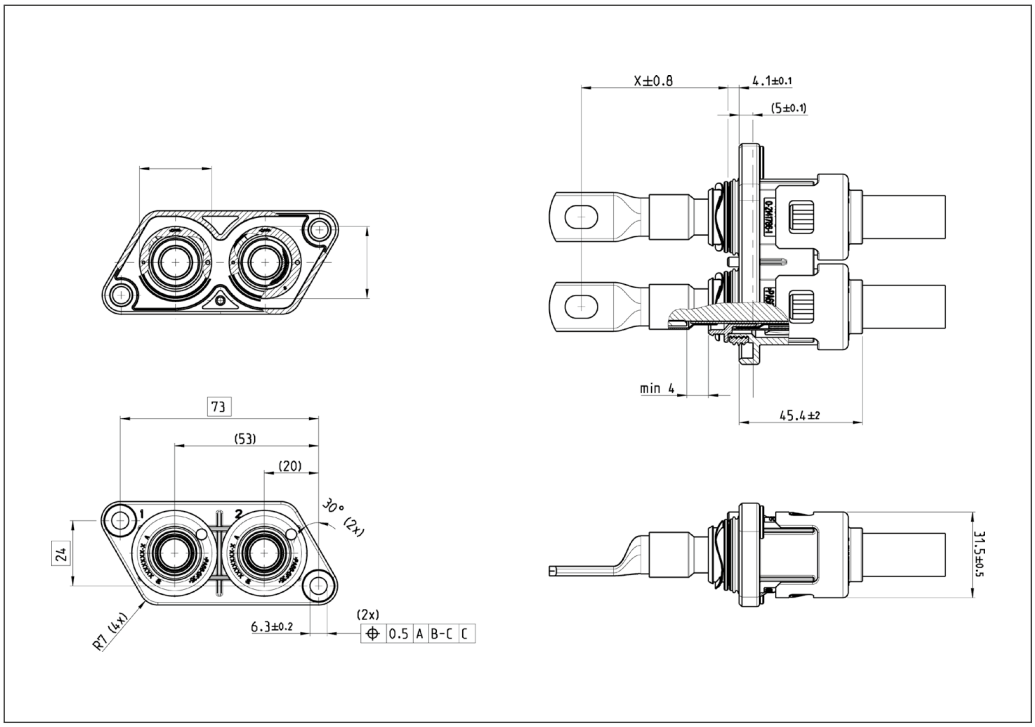

Drawing 114-94131-2 *

Applications

- Inverter
- HV Battery
- E-motor

Technical Features

Poles:
2

Terminal Size / System:
Ring tongue / Screwed

Conductor Cross-Sections:
16 mm² to 50 mm²

Wire Type:
Single-core

Voltage Rating:
1,000 VDC

Temperature Range:
-40°C up to 140°C

Current Carrying Capability:
290 A at 85°C (50 mm²)

IP Rating, Mated:
IP6K9K

HV Interlock Option:
No

CPA:
No

Fire Classification:
HB

Vibration Level:
SG 4 (LV 215-1)

Shielding / Options:
Yes

EMC Shielding Resistance:
10 mΩ

Available Codings:
A

Product Specification:
108-94293

Application Specification:
114-94133

Interface Drawing:
114-94132-2

Version (Cable Dimension)		Coding	Order Information
25 / 35 / 50 mm²	released	A	To be ordered see drawing!
16 mm²	in planning		

* Drawing number is NOT the order number!

Applications

- Inverter
- HV Battery
- E-motor

Technical Features

Poles:
3

Terminal Size / System:
Ring tongue / Screwed

Conductor Cross-Sections:
16 mm² to 50 mm²

Wire Type:
Single-core

Voltage Rating:
1,000 VDC

Temperature Range:
-40°C up to 140°C

Current Carrying Capability:
290 A at 85°C (50 mm²)

IP Rating, Mated:
IP6K9K

HV Interlock Option:
No

CPA:
No

Fire Classification:
HB

Vibration Level:
SG 4 (LV 215-1)

Shielding / Options:
Yes

EMC Shielding Resistance:
10 mΩ

Available Codings:
A

Product Specification:
108-94293

Application Specification:
114-94133

Interface Drawing:
114-94132-3

AMP+ IPT 3p xi Shielded Ring Tongue Terminal

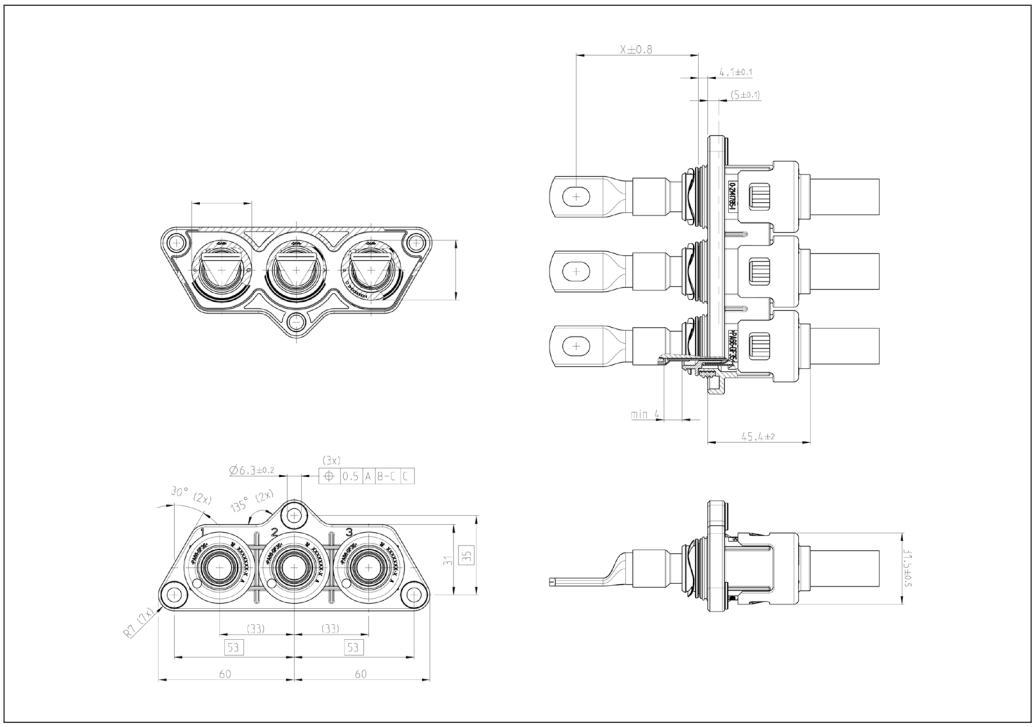

Drawing 114-94131-3 *

Version (Cable Dimension)		Coding	Order Information
25 / 35 / 50 mm²	released	A	To be ordered see drawing!
16 mm²	in planning		

* Drawing number is NOT the order number!

AMP+ IPT Connector System Kits

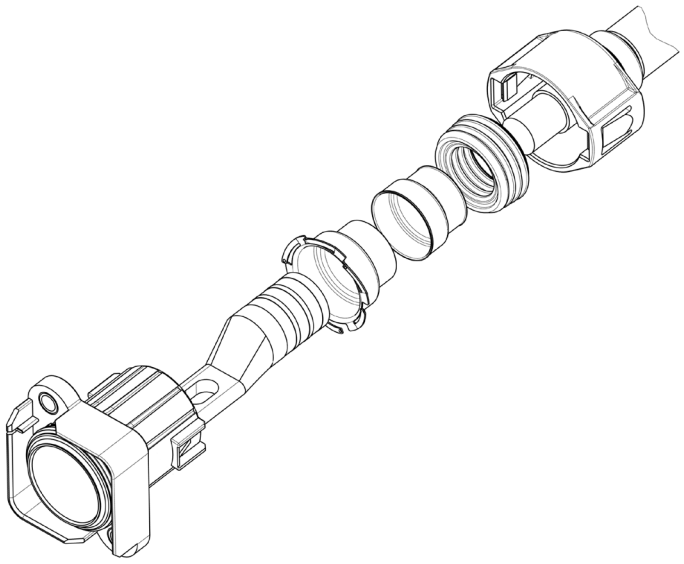

Example: Kit Number YIPT-1PXI-70MM-000

AMP+ IPT Connector System Kits *)

Connector	Position	Cable (mm^2)	Key	LADD Connector Kit Number
IPT	1	70	A	YIPT-1PXI-70MM-000
		95	A	YIPT-1PXI-95MM-000
		120	A	YIPT-1PXI-120MM-00
	2	50	N/A	YIPT-2pxi-00000000
	3	50	N/A	YIPT-3pxi-00000000

*) Kits include HVIL terminals

NOTES

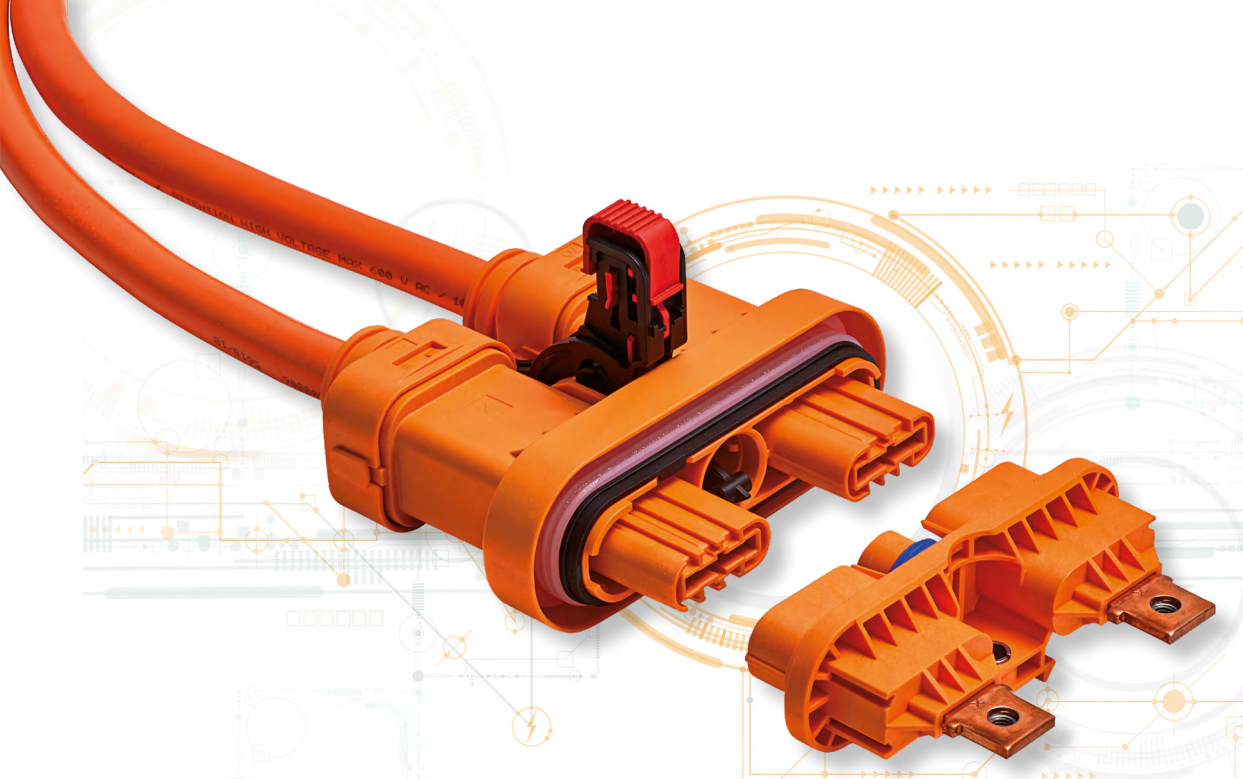

AMP+ HVU 2100 HV UNSHIELDED INTERCONNECTION SYSTEM INTRODUCTION

The AMP+ HVU 2100 two-pole connector for unshielded charging applications allows for a current of up to 372 at 85°C (95 mm²) cable and achieves vibration class LV 215 for severity level 2. The system is capable of handling voltage levels up to 1,000 VDC.

The connector system includes a tool activated CPA allowing for optimized packaging size and routing flexibility. In addition it provides finger protection according to UL standard. The header uses V0 flame resistant isolation material.

The HVU 2100 connector system can be applied to DC charging, inverter, e-motor and HV battery applications.

Naming Convention
AMP+ HVU 2100 Interconnection System

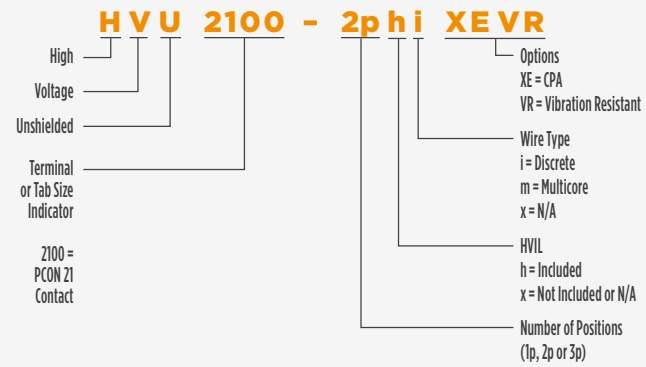

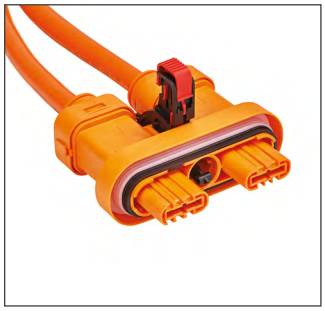

Applications

- Inverter
- HV Battery
- E-motor

Technical Features

Poles:
2

Terminal Size / System:
PCON 21

Conductor Cross-Sections:
25 mm² to 95 mm²

Wire Type:
Single-core

Voltage Rating:
1,000 VDC

Temperature Range:
-40°C up to 140°C

Current Carrying Capability:
350 A at 60°C (95 mm²)

IP Rating, Mated:
IP67, IP6K9K, IPXXD

IP Rating, Unmated:
IPXXB+ (UL finger + 2 mm / 30 N)

CPA:
Yes

Fire Classification:
HB

Vibration Level:
SG 2 (LV 215-1)

Shielding / Options:
N/A

EMC Shielding Resistance:
N/A

Available Codings:
A, B

Product Specification:
108-94682

Application Specification:
114-94551

AMP+ HVU 2100 2p xi XE – Plug

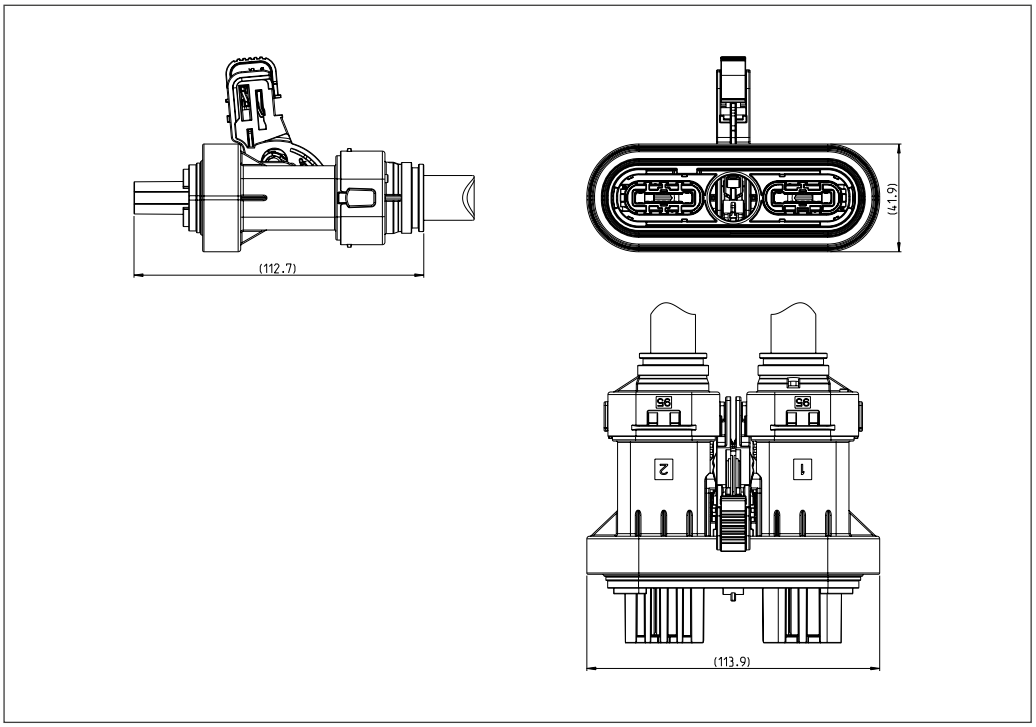

Drawing 2328809 *

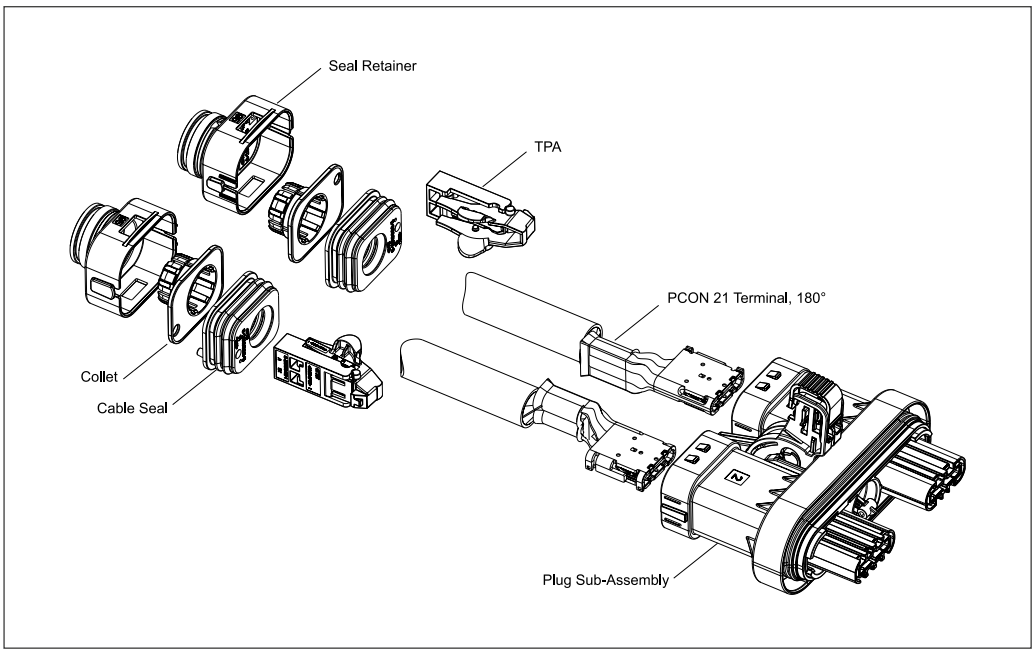

* Drawing number is NOT the order number!

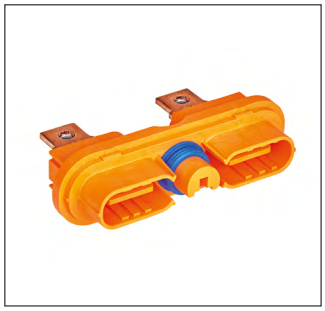

Applications

- Inverter
- HV Battery
- E-motor

Technical Features

Poles:
2

Tab Size:
21 mm incl. finger protection

Voltage Rating:
1,000 VDC

Temperature Range:
-40°C up to 140°C

Current Carrying Capability:
372 A at 85°C (95 mm^2)

IP Rating, Mated:
IP67, IP6K9K

IP Rating, Unmated:
IPXXB + (UL finger + 2 mm / 30 N)

Fire Classification:
V0

Vibration Level:
SG 2 (LV 215-1)

Shielding / Options:
N/A

EMC Shielding Resistance:
N/A

Available Codings:
A

Product Specification:
108-94682

Application Specification:
114-94551

AMP+ HVU 2100 2p xi – Header

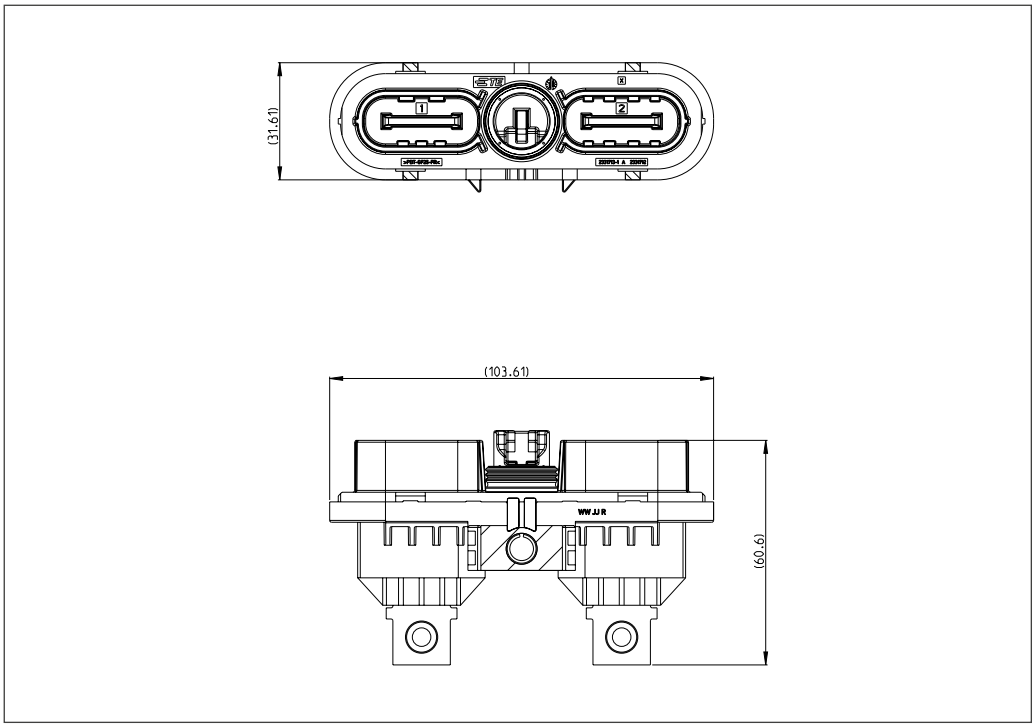

Drawing 2331712 *

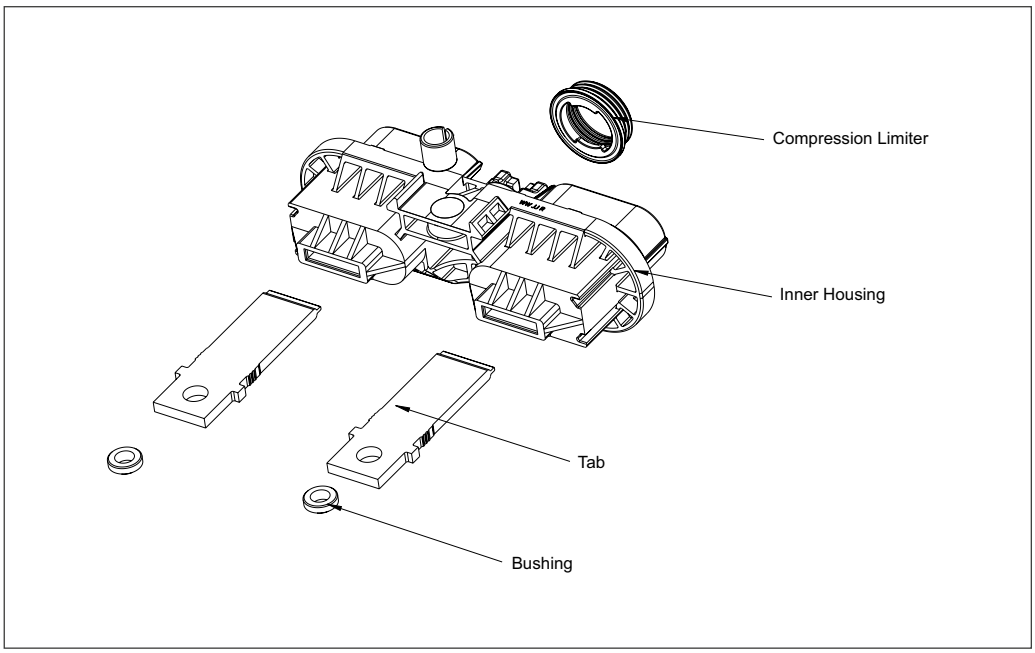

* Drawing number is NOT the order number!

NOTES

AMP+ CHARGING INLETS – CABLE ASSEMBLIES AND COMPONENTS

AMP+ charging inlets are ready to meet the challenges of today's and tomorrow's hybrid and electric vehicles. They enable smarter, faster and safe charging for vehicles across all regions.

Our extended AMP+ charging inlets portfolio includes AC, DC and CCS (Combined Charging System) inlets for the European, Chinese, Japanese and North American markets.

Designed for increased performance demands, they are scalable to fit all electrical/electronic architectures inside the vehicle, from discrete point-to-point operation, or via distributed intelligent control.

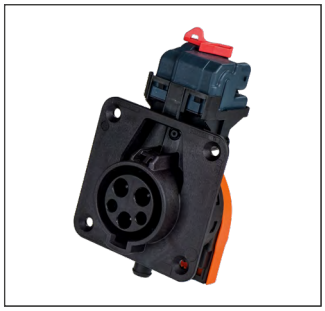

Technical Features

Poles:
5 p

Terminal Size / System:
Round contact

Conductor Cross-Sections:
0.75 to 1.00 mm² / 4.00 mm² / 6.00 mm²

Voltage Rating:
250 VDC

Temperature Range:
-30°C to +50°C

Current Carrying Capability:
32 A

IP Rating:
IP44 (front),
IP44 (rear)

Cable Outlet:
90° (can be rotated)

Finger Protection:
Yes

Vibration Level:
SG 2 (LV 215-1)

Application Specification:
114-94163-1

AMP+ Charging Inlet Type 1 + Cable Assemblies

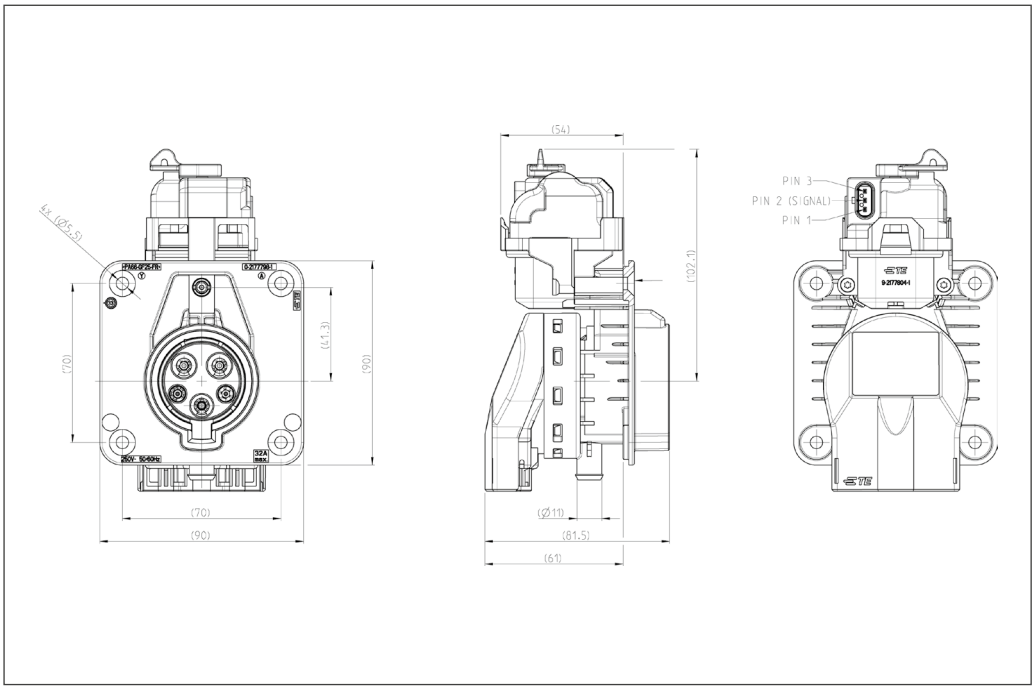

Drawing 114-94163-1 *

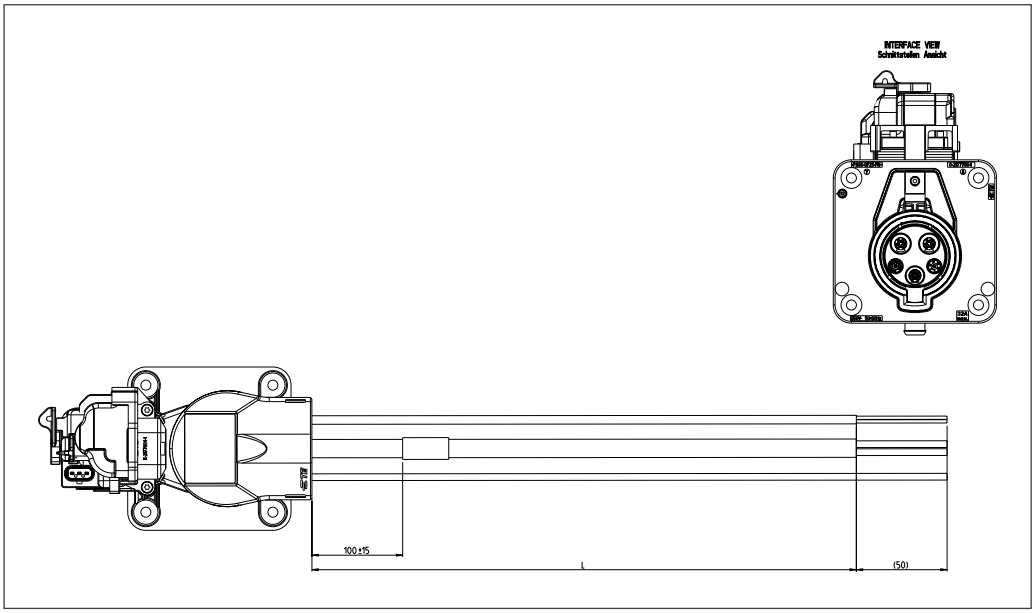

Drawing for cable assembly 2208877 * (4 mm²) and 2208876 * (6 mm²).
Note: Cable outlet is fixed and cannot be rotated.

* Drawing number is NOT the order number!

AMP+ Charging Inlet Type 2 + Cable Assemblies

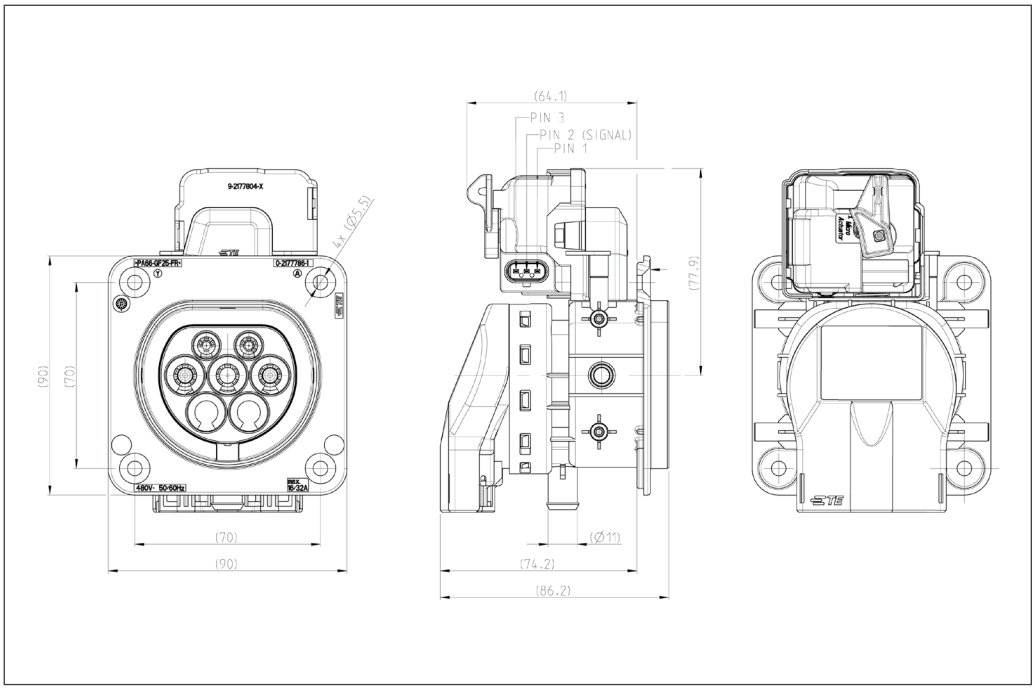

Drawing 114-94163-2 *

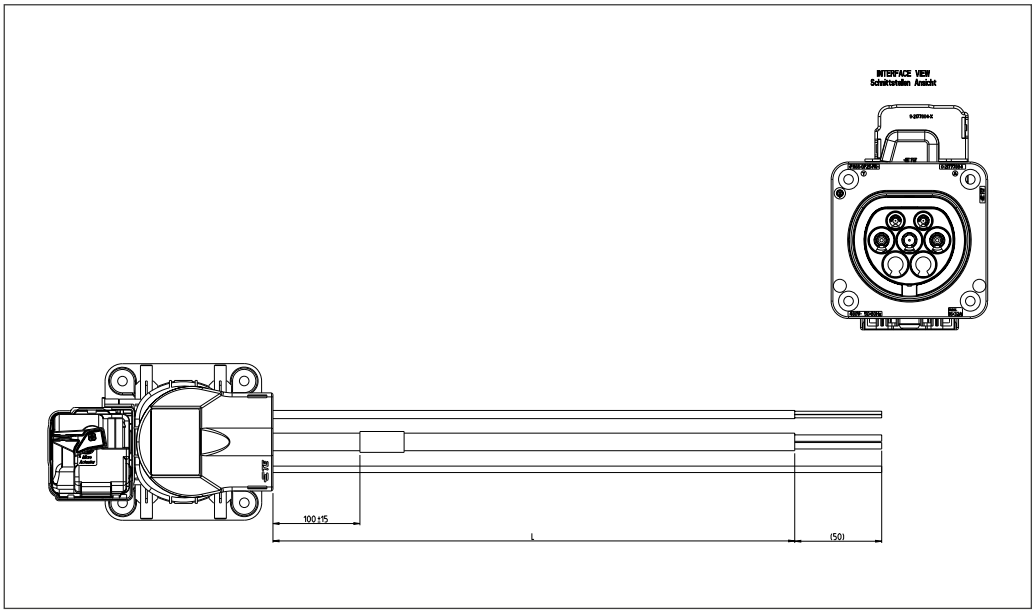

Drawing for cable assembly 2208885 * (4 mm^2) and 2208884 * (6 mm^2) + 2344189 (3 phase).
Note: Cable outlet is fixed and cannot be rotated.

Technical Features

Poles:
5 p / 7 p

Terminal Size / System:
Round contact

Conductor Cross-Sections:
0.75 to 1.00 mm² / 4.00 mm² / 6.00 mm²

Voltage Rating:
480 VDC

Temperature Range:
-30°C to +50°C

Current Carrying Capability:
16/32 A

IP Rating:
IP44 (front),
IP44 (rear)

Cable Outlet:
90° (can be rotated)

Finger Protection:
Yes

Vibration Level:
SG 2 (LV 215-1)

Application Specification:
114-94163-2

* Drawing number is NOT the order number!

AMP+ Charging Inlet Type GB + Cable Assemblies

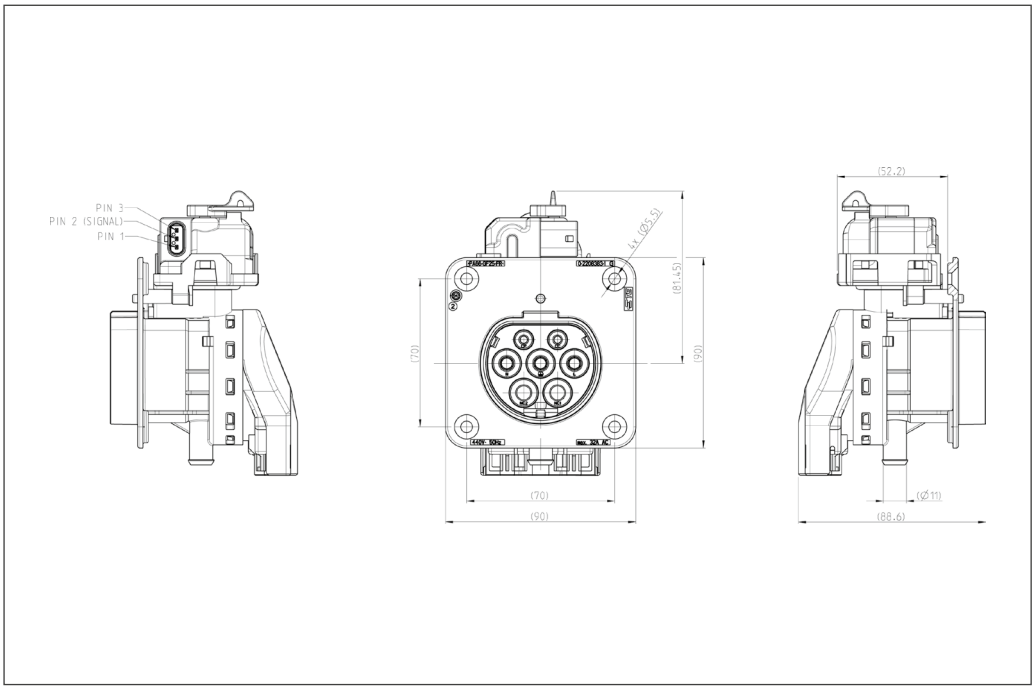

Drawing 114-94212 *

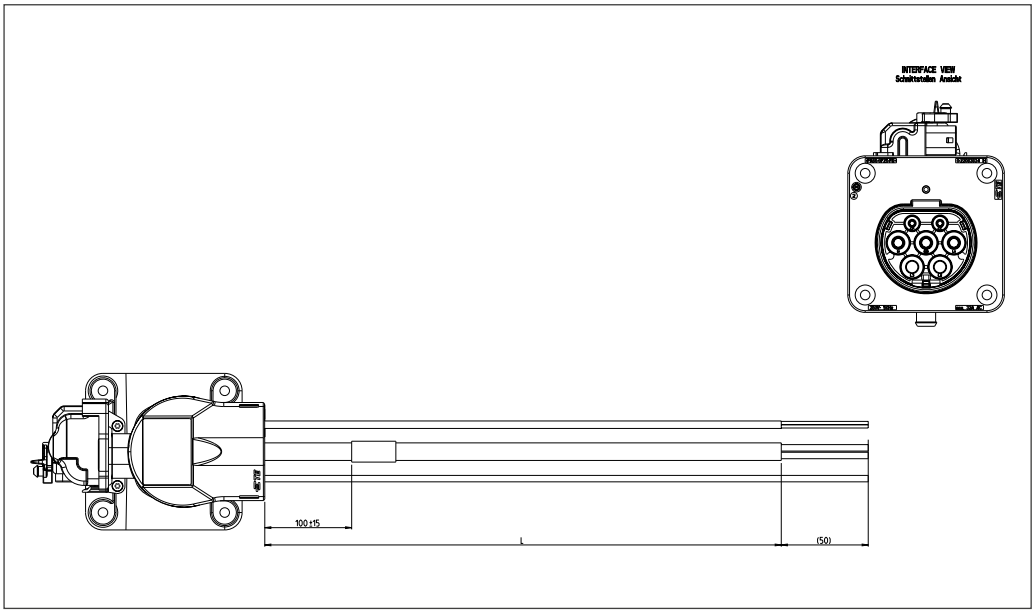

Drawing for cable assembly 2208882 * (4 mm²) and 2208881 * (6 mm²).
Note: Cable outlet is fixed and cannot be rotated.

Technical Features

Poles:
5 p / 7 p

Terminal Size / System:
Round contact

Conductor Cross-Sections:
0.75 to 1.00 mm² / 4.00 mm² / 6.00 mm²

Voltage Rating:
440 VDC

Temperature Range:
-30 °C to +50 °C

Current Carrying Capability:
16/32 A

IP Rating:
IP44 (front),
IP44 (rear)

Cable Outlet:
90° (can be rotated)

Finger Protection:
Yes

Vibration Level:
SG 2 (LV 215-1)

Application Specification:
114-94212

* Drawing number is NOT the order number!

AMP+ Charging Inlet, Type 1, Combined Charging System (CCS 1)

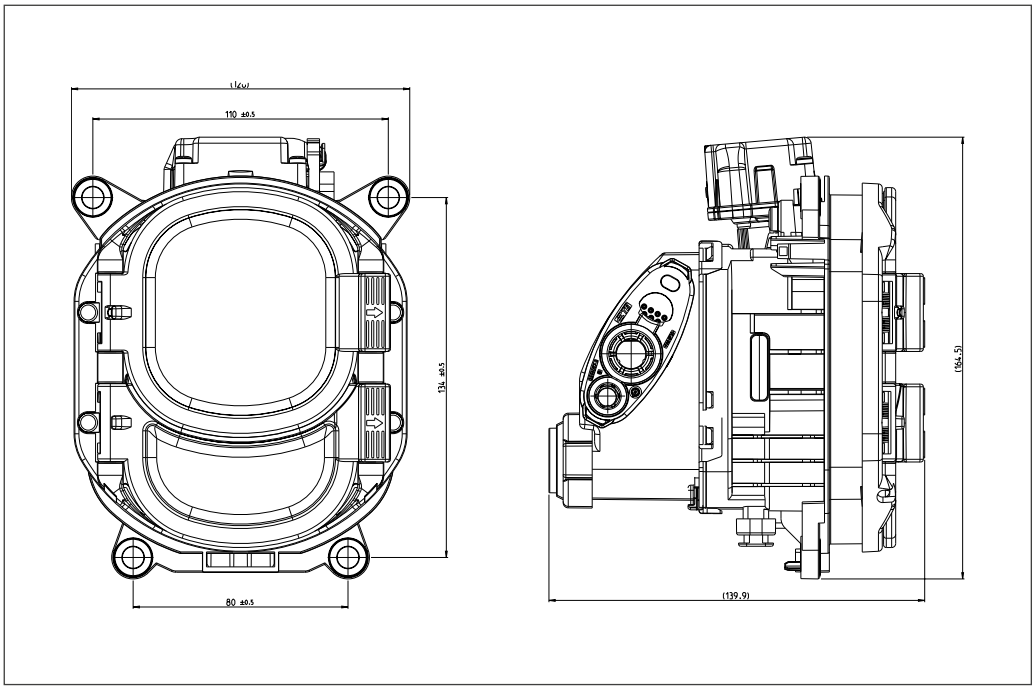

Drawing 2337006 *
Drawing includes all required parts to order a complete charging inlet.

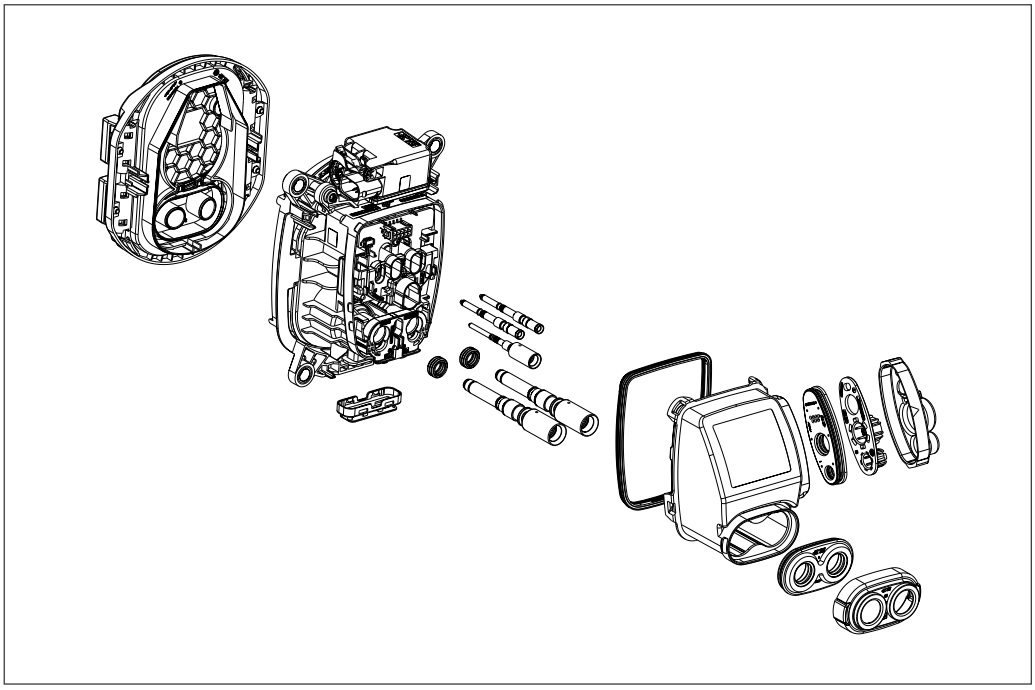

Technical Features

Poles:
5 p

Terminal Size / System:
Round contact

AC Contacts:
6 mm²

DC Contacts:
50 mm²

Voltage Rating AC:
250 VAC

Voltage Rating DC:
600 VDC

Temperature Range:
-30°C to +50°C

Current Carrying Capability:
32 A

IP Rating, Mated:
IP44
Cable outlet backside IP67

Cable Outlet:
90° and 180°

Finger Protection:
Yes

Vibration Level:
SG 2 (LV 215-1)

Application Specification:
114-94648 (90°)
114-94649 (180°)

Product Specification:
108-94777

* Drawing number is NOT the order number!

AMP+ Charging Inlet, Type 2, Combined Charging System (CCS 2)

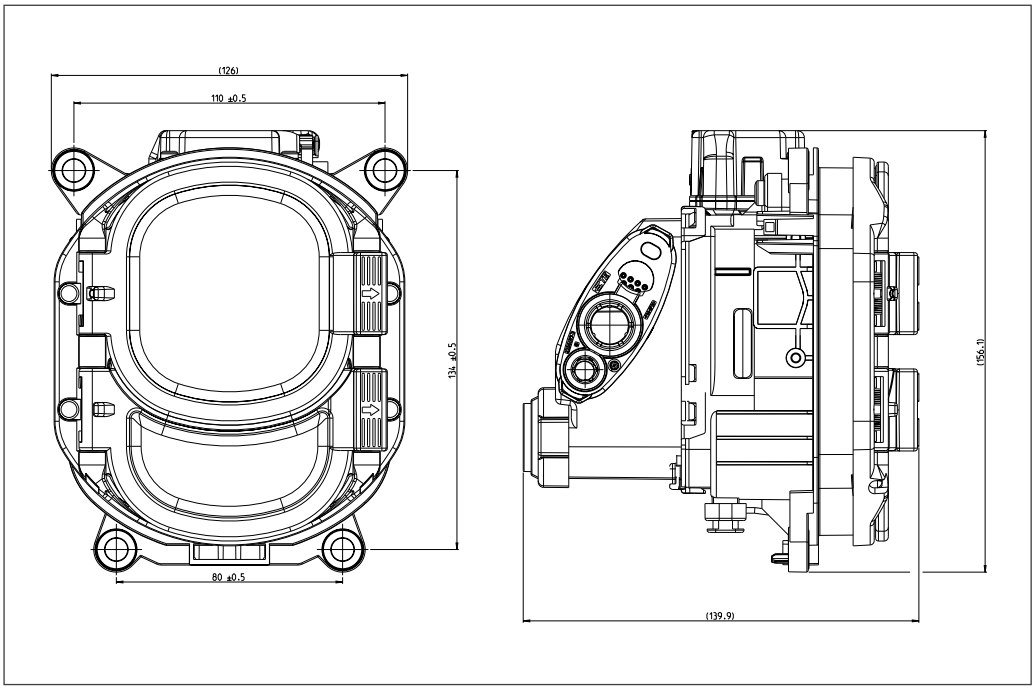

Drawing 2337016 *
Drawing includes all required parts to order a complete charging inlet.

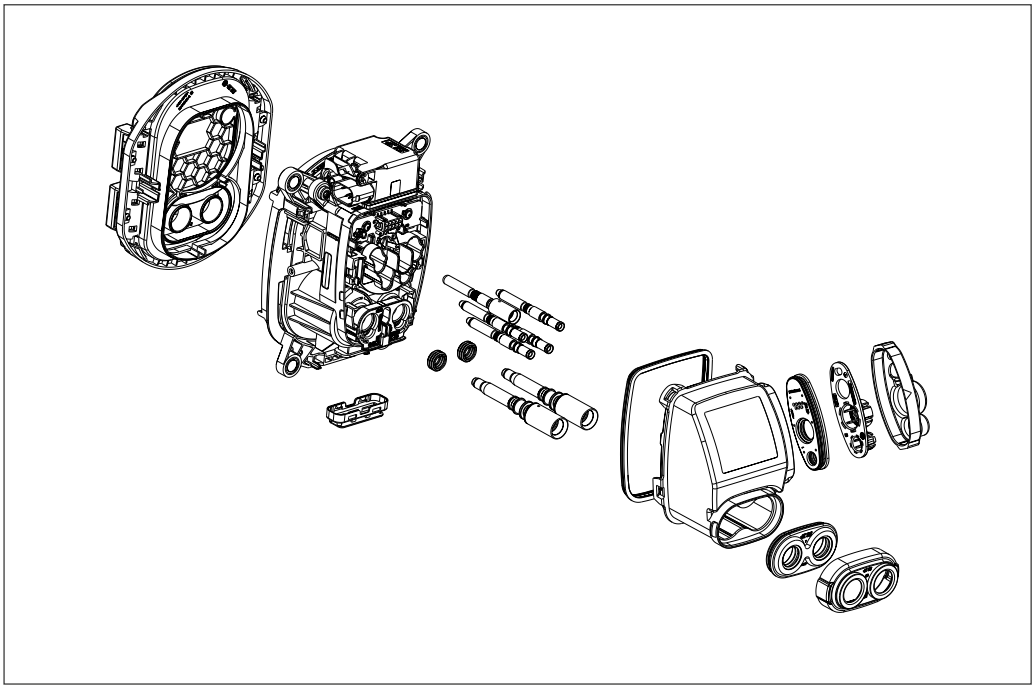

Technical Features

Poles:
5 p / 7 p

Terminal Size / System:
Round contact

AC Contacts:
6 mm²

DC Contacts:
50 mm²

Voltage Rating AC:
up to 480 VAC

Voltage Rating DC:
up to 1,000 VDC

Temperature Range:
-30°C to +50°C

Current Carrying Capability:
32 A

IP Rating, Mated:
IP44
Cable outlet backside IP67

Cable Outlet:
90° and 180°

Finger Protection:
Yes

Vibration Level:
SG 2 (LV 215-1)

Application Specification:
114-94650 (90°)
114-94651 (180°)

Product Specification:
108-94778

* Drawing number is NOT the order number!

AMP+ Charging Inlet, Type 1, AC

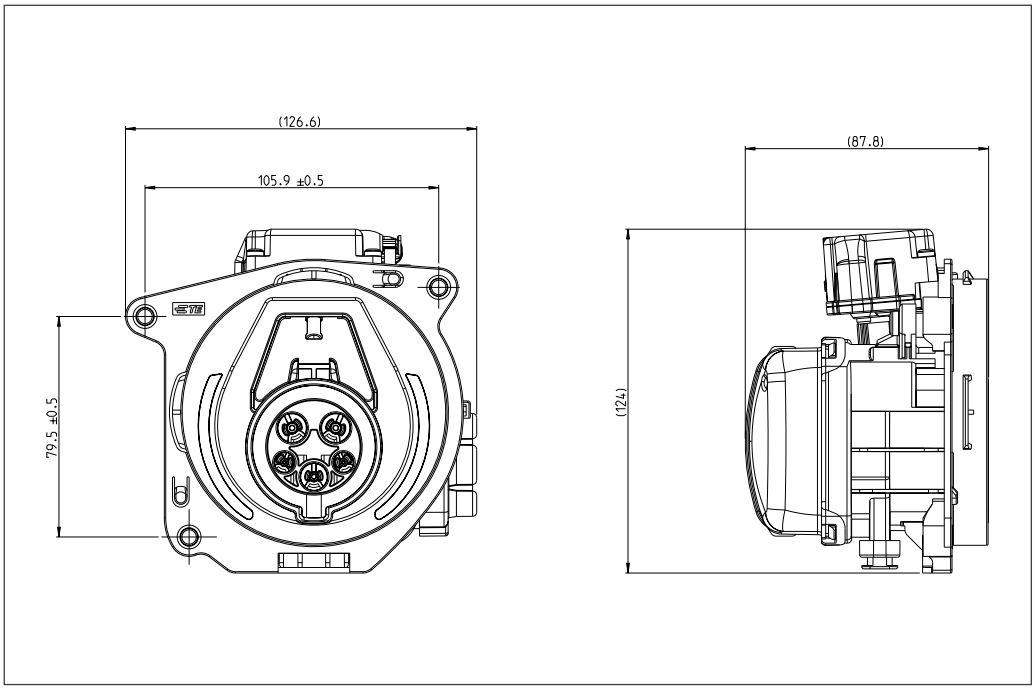

Drawing 2368475 *
Drawing includes all required parts to order a complete charging inlet.

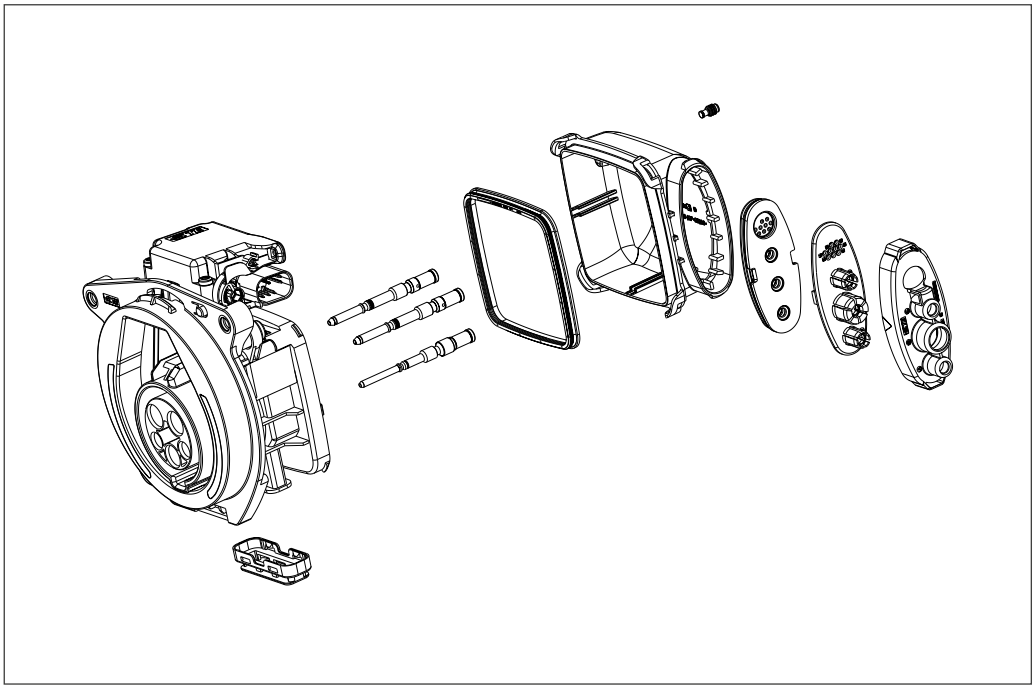

Technical Features

Poles:
5 p

Terminal Size / System:
Round contact

Conductor Cross-Sections:
0.75 to 1.00 mm² / 4.00 mm² / 6.00 mm²

Voltage Rating:
250 VDC

Temperature Range:
-30°C to +50°C

Current Carrying Capability:
32 A

IP Rating, Mated:
IP44
Cable outlet backside IP67

Cable Outlet:
90° (can be rotated)

Finger Protection:
Yes

Vibration Level:
SG 2 (LV 215-1)

Application Specification:
114-94652

Product Specification:
108-94779

* Drawing number is NOT the order number!

AMP+ Charging Inlet, Type 2, AC

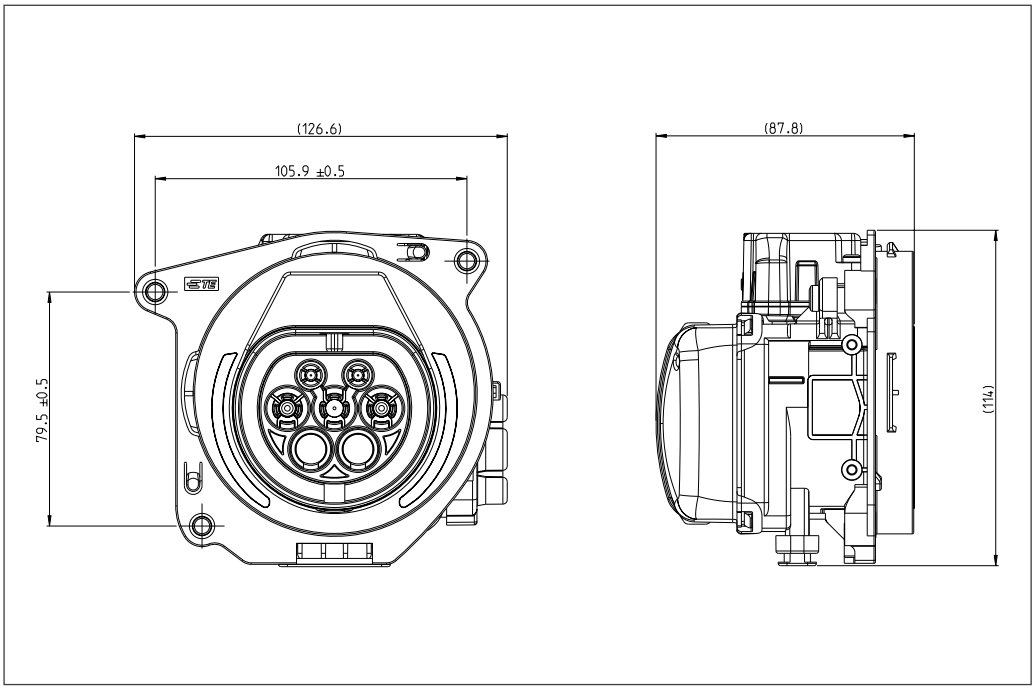

Drawing 2368472 *
Drawing includes all required parts to order a complete charging inlet.

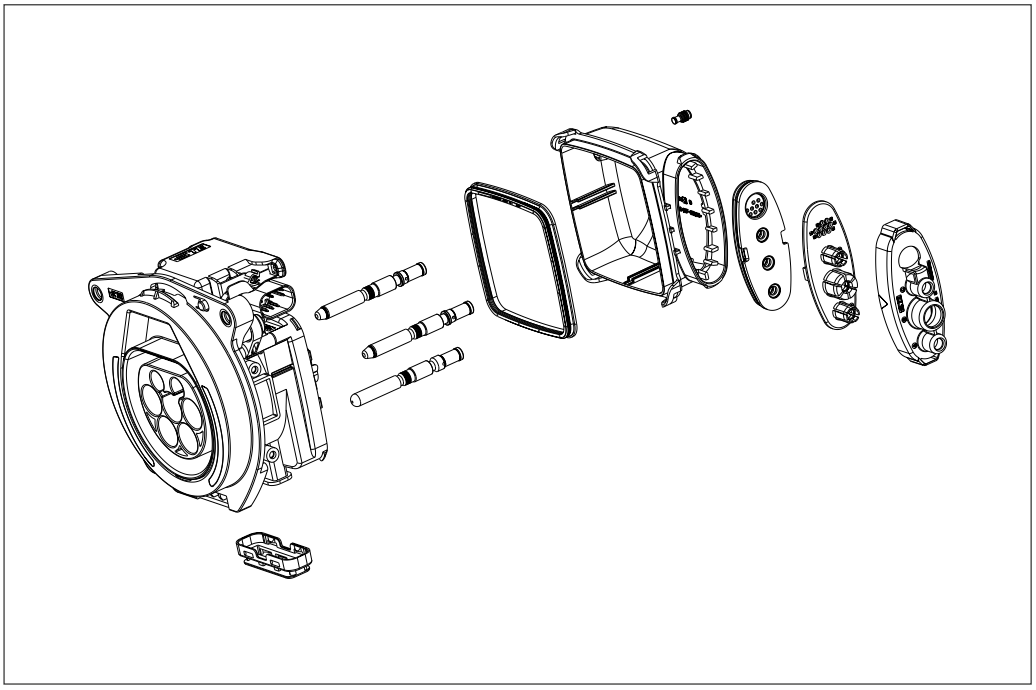

Technical Features

Poles:
5 p / 7 p

Terminal Size / System:
Round contact

Conductor Cross-Sections:
0.75 to 1.00 mm² / 4.00 mm² / 6.00 mm²

Voltage Rating:
up to 480 VDC

Temperature Range:
-30°C to +50°C

Current Carrying Capability:
32 A

IP Rating, Mated:
IP44
Cable outlet backside IP67

Cable Outlet:
90° left, right and downwards

Finger Protection:
Yes

Vibration Level:
SG 2 (LV 215-1)

Application Specification:
114-94653

Product Specification:
108-94780

* Drawing number is NOT the order number!

AMP+ Charging Inlet, Type GB, AC

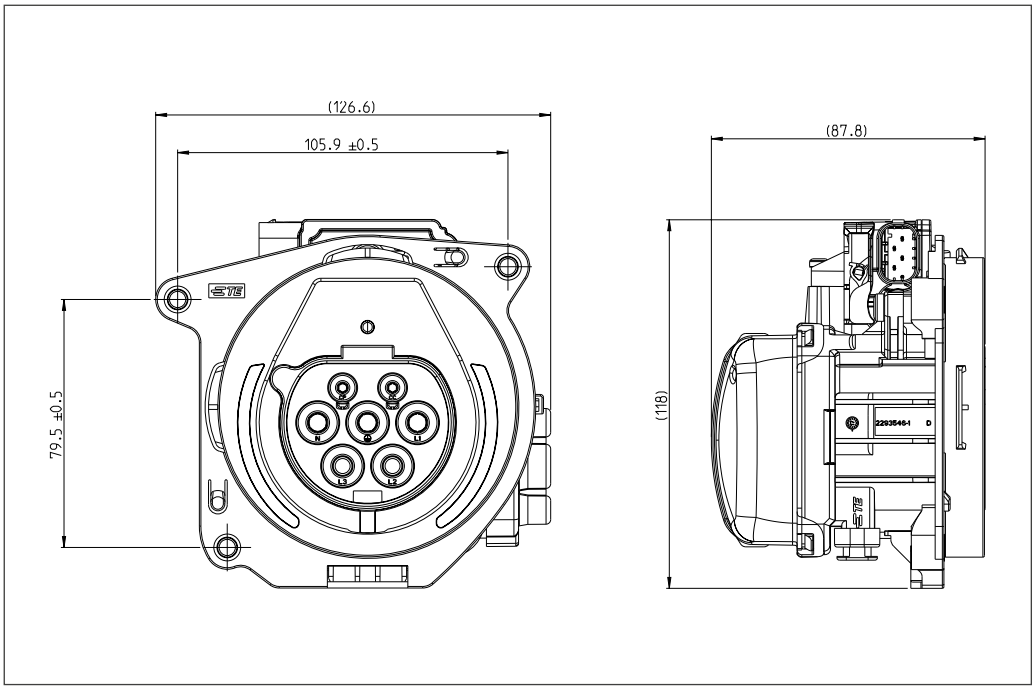

Drawing 2368478 *
Drawing includes all required parts to order a complete charging inlet.

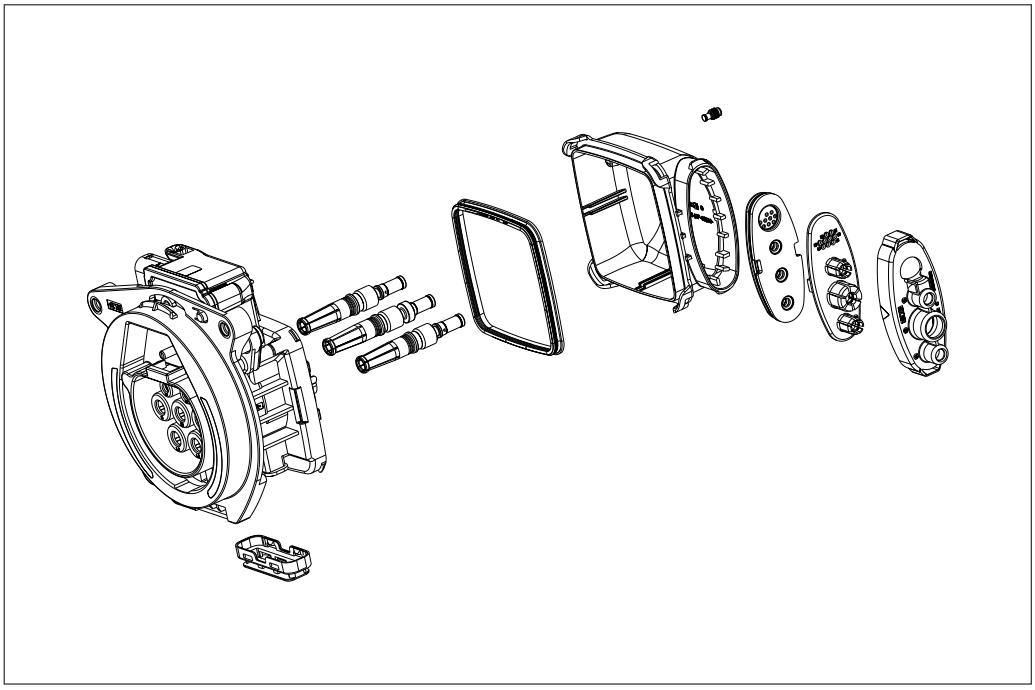

Technical Features

Poles:
5 p

Terminal Size / System:
Round contact

Conductor Cross-Sections:
0.75 to 1.00 mm² / 4.00 mm² / 6.00 mm²

Voltage Rating:
250 VDC

Temperature Range:
-30°C to +50°C

Current Carrying Capability:
32 A

IP Rating, Mated:
IP44
Cable outlet backside IP67

Cable Outlet:
90° (can be rotated)

Finger Protection:
Yes

Vibration Level:
SG 2 (LV 215-1)

Application Specification:
114-94654

Product Specification:
108-94781

* Drawing number is NOT the order number!

NOTES

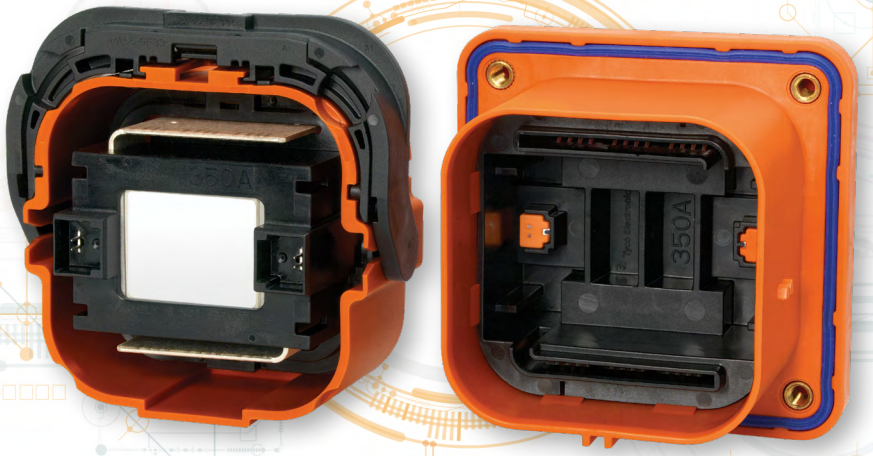

AMP+ MANUAL SERVICE DISCONNECT

Safe, reliable solutions are required to protect service technicians and emergency response teams when working with the high voltages required in electric vehicles.

TE Connectivity's AMP+ Manual Service Disconnec utilizes a two-stage lever to open the HVIL circuit prior to separation of HV contacts. This tool-free solution for disconnecting the internal HV battery pack and protecting the battery pack HV cables from short circuiting is available in a scalable design with a variety of fuse ratings.

All HV conducting surfaces on receptacle assembly are finger proof touch safe.

AMP+ Manual Service Disconnect – Plug

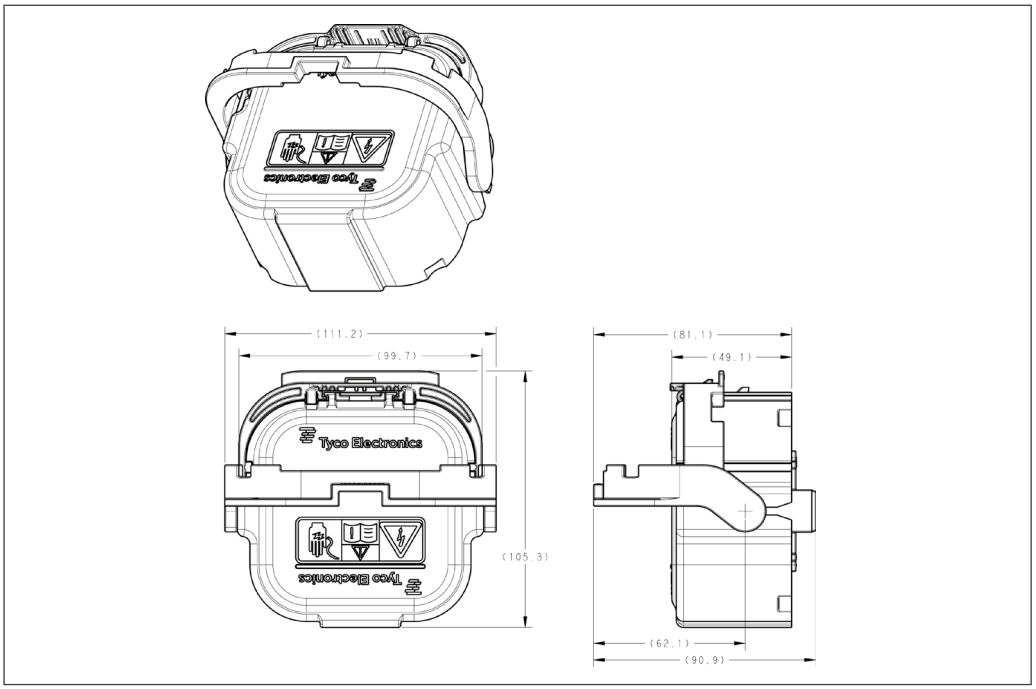

Drawing 2103172 *

Technical Features

Fuse Rating:
Up to 630 A

Voltage Rating:
450 VDC (with fuse)
1,000 VDC (Shunt)

Temperature Range:
-40°C to 65°C

Storage Temperature:
-40°C to 85°C

IP Rating:
Mated: IPx7, IP6k9k
Unmated: IP2xb

HV Interlock Option:
2x integrated, internal

Current Rating:
Based on fuse selection

Standards and Specifications:
USCAR-2
USCAR-37
IEC 60529
RoHS

Product Specification:
108-127000

Application Specification:
408-10432

Fuse Rating	Order Information
200 A	To be ordered see drawing!
250 A	
350 A	
630 A	
Shunt	

* Drawing number is NOT the order number!

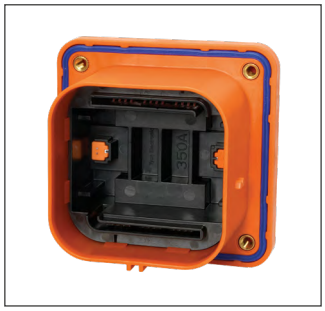

AMP+ Manual Service Disconnect – Receptacle

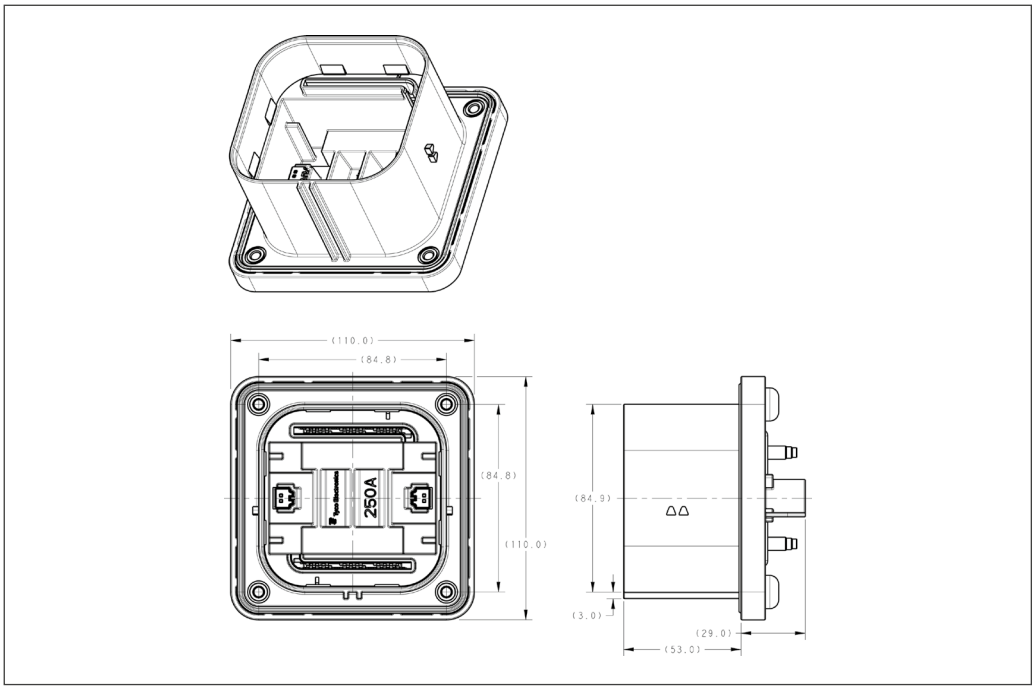

Drawing 1587987 *

Technical Features

Fuse Rating:
Up to 630 A

Voltage Rating:
450 VDC (with fuse)
1,000 VDC (Shunt)

Temperature Range:
-40°C to 65°C

Storage Temperature:
-40°C to 85°C

IP Rating:
Mated: IPx7, IP6k9k
Unmated: IP2xb

HV Interlock Option:
2x integrated, internal

Current Rating:
Based on fuse selection

Standards and Specifications:
USCAR-2
USCAR-37
IEC 60529
RoHS

Product Specifications:
108-127000

Application Specifications:
408-10377

	Order Information
Receptacle Housing	To be ordered see drawing!

* Drawing number is NOT the order number!

Technical Features

Fuse Rating:
Up to 630 A

Voltage Rating:
750 VDC (with fuse)
1,000 VDC (shunt)

Operation Temperature:
-40°C to +65°C

Storage Temperature:
-40°C to +85°C

IP Rating:
Mated: IPx7, IP6k9k
Unmated: IP2xb

Flammability Grade:
V0
Unmated: IP2xb

HV Interlock Option:
2x integrated, internal

Current Rating:
Based on fuse selection

Standards and Specifications:
USCAR-2
USCAR-25
USCAR-37

Product Specification:
108-101601

Application Specification:
408-101003

AMP+ Manual Service Disconnect – Plug for ICT Applications

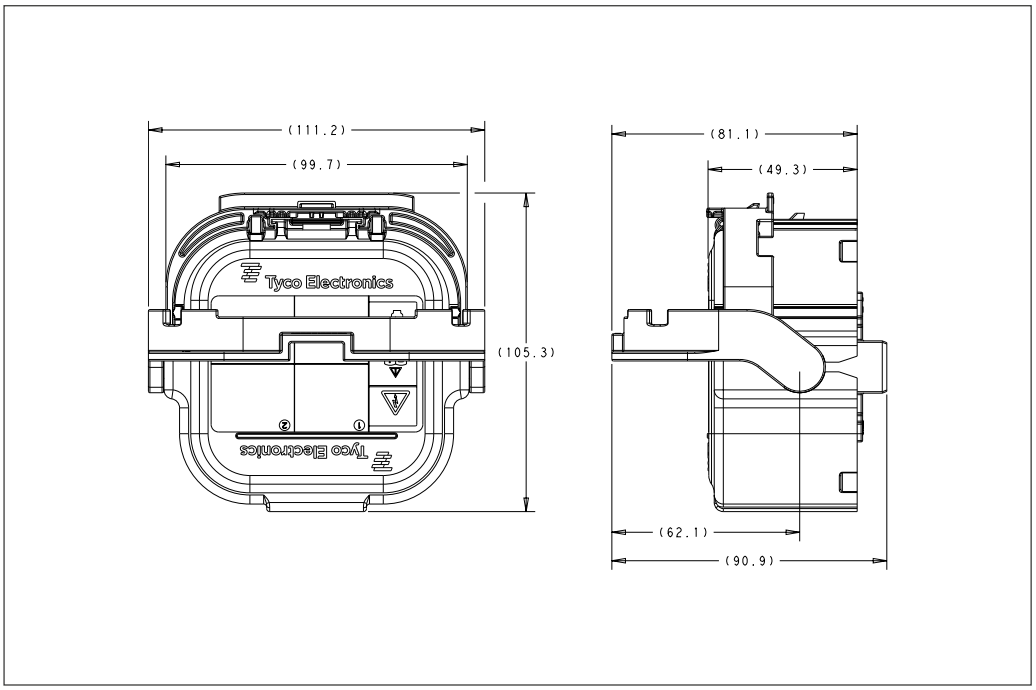

Drawing 2315856 *

Fuse Rating	Part Number
630 A	2315856-6
500 A	2315856-5
450 A	2315856-4
350 A	2315856-3

* Drawing number is NOT the order number!

AMP+ Manual Service Disconnect – Receptacle for ICT Applications

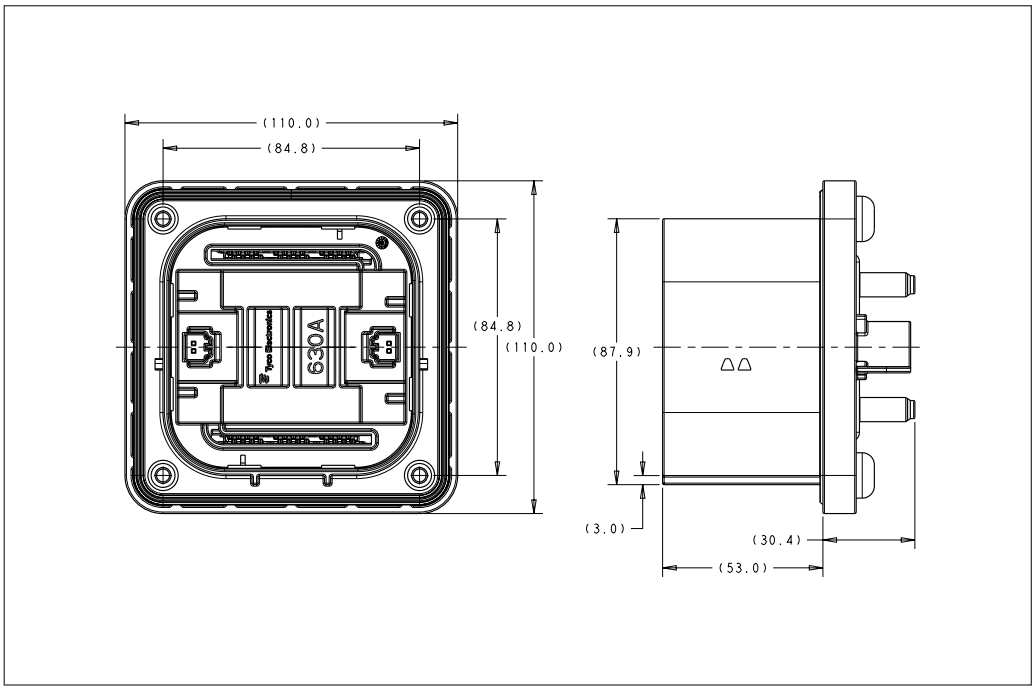

Drawing 2315855 *

Technical Features

Fuse Rating:
Up to 630 A

Voltage Rating:
750 VDC (with fuse)
1,000 VDC (Shunt)

Operation Temperature:
-40°C to +65°C

Storage Temperature:
-40°C to +85°C

IP Rating:
Mated: IPx7, IP6k9k
Unmated: IP2xb

Flammability Grade:
V0
Unmated: IP2xb

HV Interlock Option:
2x integrated, internal

Current Rating:
Based on fuse selection

Standards and Specifications:
USCAR-2
USCAR-25
USCAR-37

Product Specification:
108-101601

Application Specification:
408-101004

Part Description	Part Number
M8 threaded stud; Marking 630 A	2315855-6
M8 threaded stud; Marking 500 A	2315855-5
M8 threaded stud; Marking 450 A	2315855-4
M8 threaded stud; Marking 350 A	2315855-3

* Drawing number is NOT the order number!

NOTES

HIGH-VOLTAGE RELAYS & CONTACTORS

Better. Smaller. Safer. TE Connectivity's high-voltage relays and contactors enable safe disconnection and connection of the traction battery. Suited for use in hybrid, full electric, fuel cell vehicles as well as vehicle charging systems, they use proven technology in an innovative manner.

Our high-voltage product portfolio is steadily growing and has been completed by a high performing plug-in version: the EVC 80 main contactor. With our EVC 175, EVC 250 and EVC 250-800 main contactors an extensive choice of new generation high-voltage contactors is now available.

Alongside TE's proven EVC 135 and EVC 500 hermetically sealed contactors stand for fast and reliable current switching. Completing the range, our Mini K HV pre-charge relays feature a cost-effective, safe and light-weight solution for DC high-voltage power systems.

All our high-voltage relays and contactors meet the demanding switching requirements of hybrid and electric vehicles.

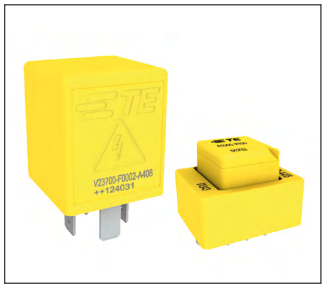

Mini K HV Precharge Relays

Key Features

- Compact high voltage relay for precharge applications up to 450 VDC
- Precharge current up to 20 A
- Limiting break current up to 20 A
- Small package size, low profile
- Plug-in and PCB version available Quick connect (QC) terminal assignment similar to ISO 7588-1

Typical Applications

- DC high voltage precharge applications in hybrid, full battery electric vehicles and fuel cell cars

Contact Data

Contact arrangement:
1 Form X (NO DM)
Rated voltage:
400 VDC
Limiting cont. current at 85°C:
n/a [1)]
Limiting making / breaking current:
20 A >105 ops. / 20 A >10 ops. [2)]
Operate / release time typ.:
2.5 ms / 1 ms

Coil Data

Rated coil voltage
12 VDC [1)]
Rated coil power (+23°C):
PCB: 2.9 W / Plug-in: 3.5 W [1)]
Coil resistance (+23°C):
PCB: 50 Ω / Plug-in: 41.6 Ω

Other Data

Temperature range:
-40°C to +85°C
Category and degree of protection:
RT II – Flux proof
Terminal type and mounting:
PCB and plug-in/QC
Dimensions LxWxH (approx.):
PCB: 25.5 x 20.7 x 19.3 mm, (1.0 x 0.8 x 0.8")
Plug-in: 29.9 x 29.9 x 34.7 mm, (1.2 x 1.2 x 1.4") w/o terminals
Weight (approx.):
PCB: 17 g (0.6 oz)
Plug-in: 39 g (1.4 oz)

Dimensions PCB Version

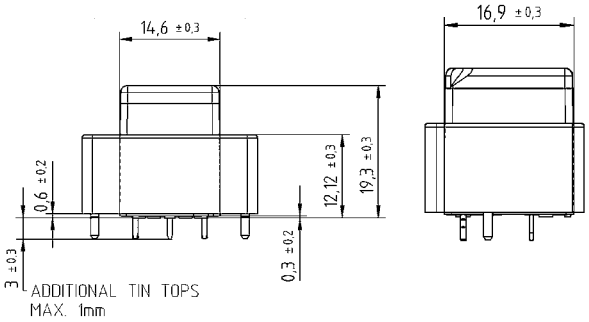

Terminal Assignment
1 form X (NO DM)

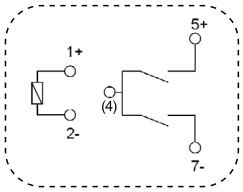

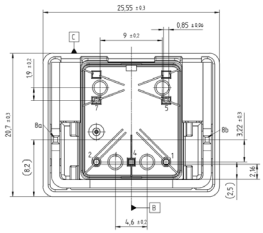

Dimensions Plug-in Version

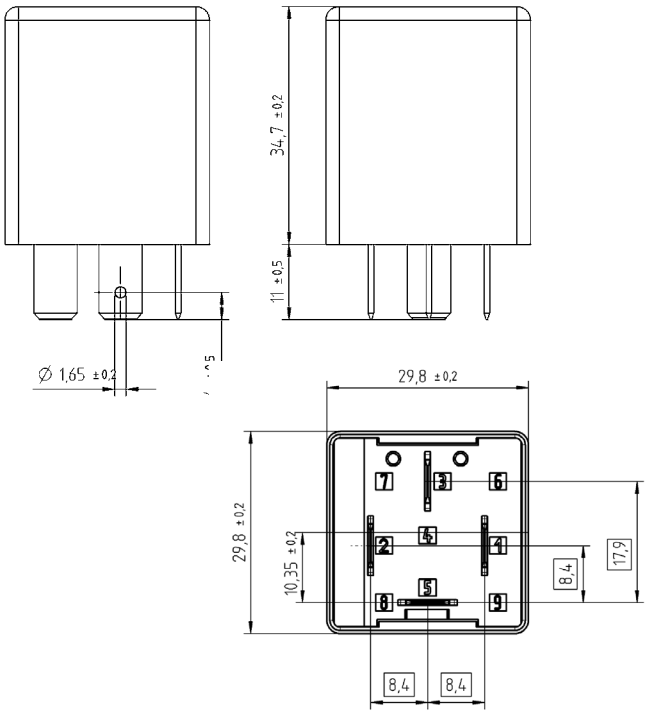

Terminal Assignment
1 form X (NO DM)
with resistor

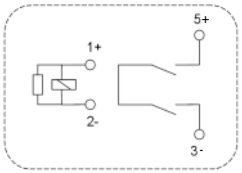

Ordering Information Mini K HV precharge Relays

Product Code	Arrangement	Coil	Terminal / Mounting	Coil Suppression	Rated Voltage	Resistance	Part Number
V23700-C0001-A408	1 form X (NO DM)	12 VDC	PCB	without parallel resistor	400 VDC	50 Ω	2-1904058-5
V23700-F0002-A408	1 form X (NO DM)	12 VDC	Plug-in, QC	with parallel resistor	400 VDC	41.6 Ω	2-1904058-7

[1)] Max. coil current is limited and depends on operating conditions. Consult TE Connectivity for details.
[2)] Min. 10 fault break operations.

EVC 80 Main Contactor

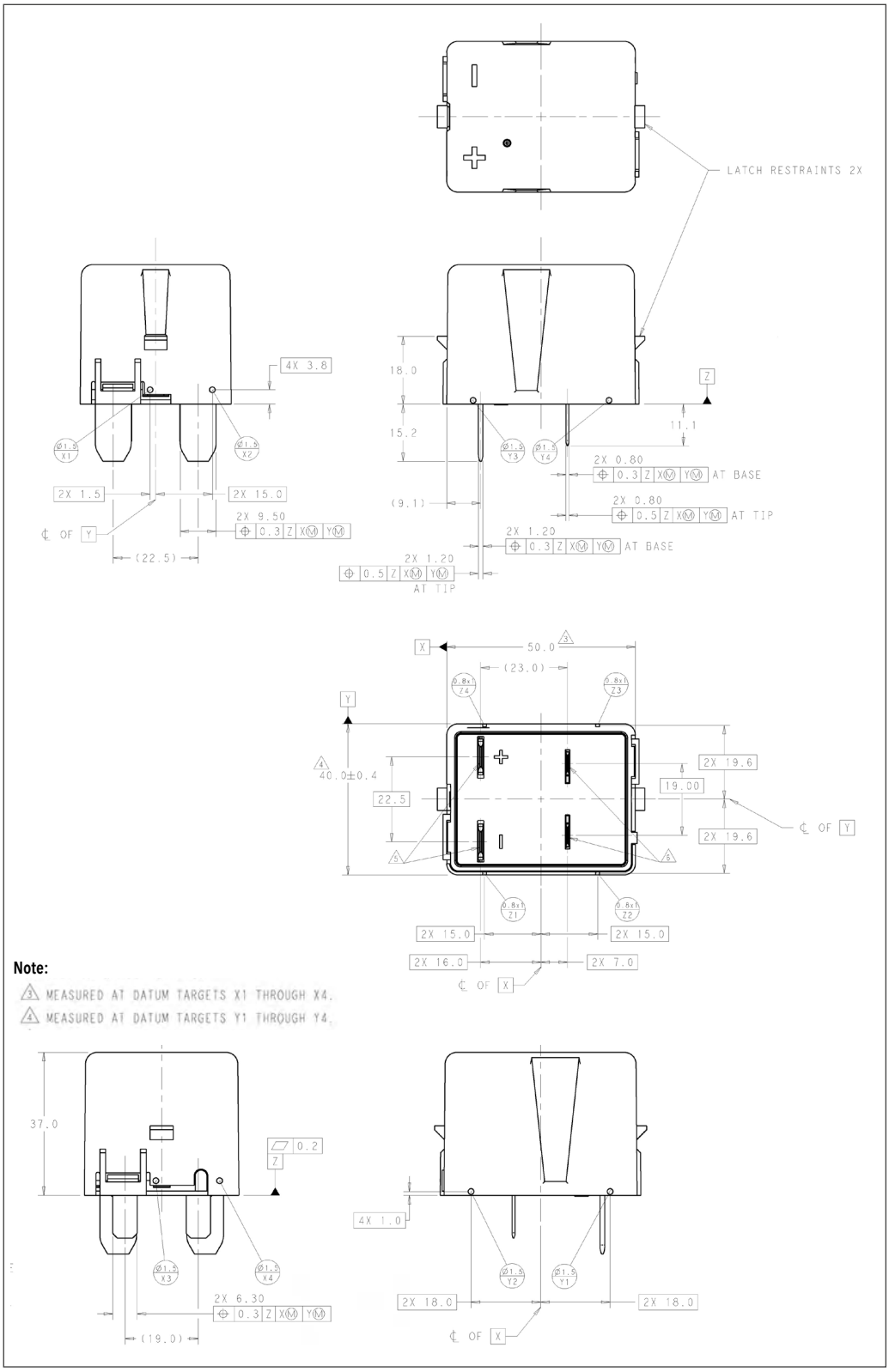

Key Features

- Continuous current 80 A at 85°C
- Suitable for voltage levels up to 450 VDC
- Short circuit carry capability 900 A

Typical Applications

- DC high voltage high current applications
- Main contactors for hybrid and auxillary contactor for full battery electric vehicles and fuel cell cars
- Battery charging systems

Contact Data

Contact arrangement:
1 Form X (NO DM)
Rated voltage:
450 VDC
Limiting cont. current at 85°C:
80 A
Limiting make or break current:
32 A / 32 A, 450 V (>5,000 ops.)
80 A, 10 V / 2 A, 420 V (>75,000 ops.)
Short term current rating:
(6 min) 150 A
Short circuit carry current:
(25 ms) 2000 A
Operate / release time max.:
25 / 10 ms at 12 VDC (coil voltage)

Coil Data

Rated coil voltage:
12 VDC
Rated coil power (+23°C):
6.7 W
Coil resistance (+23°C):
21.4 Ω

Other Data

Temperature range:
–40°C to +85°C
Category and degree of protection:
Hermetically sealed
Terminal type and mounting:
Plug-in/QC
Dimensions LxWxH (approx.):
50.0 x 40.0 x 37.0 mm
(2.0 x 1.6 x 1.5")
Weight (approx.):
150 g (5.3 oz)

Ordering Information EVC 80 Main Contactor

Product Code	Arrangement	Coil (VDC)	Econo-mization	Rated Voltage (VDC)	Terminal Type	Mounting	Resistance	Part Number
EVC 80-4ANG	1 form X (NO DM)	12	Optional	450	Plug-in	QC	21.4 Ω	2203997-1

Key Features

- Continuous current 135 A at 85°C (35 mm²) [1]
- Load voltage up to 450 VDC [1]
- Short circuit carry capability 2,000 A
- Available in side mount or bottom mount configuration
- Customized connections available

Typical Applications

- Main contactor, precharge and auxiliary relay for hybrid and electric vehicles

Contact Data

Contact arrangement:
1 Form X (NO DM)
Rated voltage:
450 VDC [2]
Limiting cont. current at 85°C:
135 A
Limiting make or break current:
50 A / 50 A (>50,000 ops.)
Short term current rating:
Continuous carry current
(1 min) 400 A
Breaking capability 660 A
Short circuit carry current:
2,000 A
Operate / release time typ.:
25 ms / 10 ms

Coil Data

Rated coil voltage:
12 VDC, 24 VDC
Coil resistance (+20°C):
26 Ω, 15.3 Ω, 3.8 Ω and 96 Ω available for different pull-in voltages

Other Data

Temperature range:
–40°C to +85°C
Category and degree of protection:
Hermetically sealed
Terminal type and mounting:
Stripped wires (coil) / M5 threaded inserts (load); screws
Dimensions LxWxH (approx.):
53.8 x 35.2 x 58 mm
(2.12 x 1.38 x 2.28")
Weight (approx.):
180 g (6.3 oz)

EVC 135 Contactor

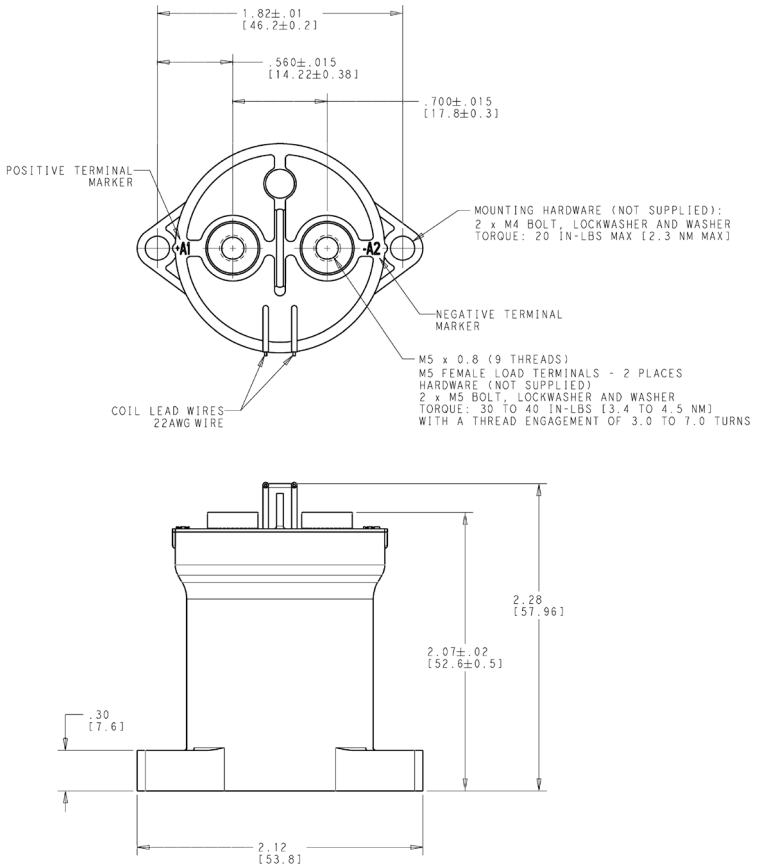

Bottom Mount

Ordering Information EVC 135 Contactor

Product Code	Arrangement	Coil (VDC)	Econo-mization	Coil Suppr.	Rated Voltage (VDC)	Terminal Type	Mounting	Resis-tance	Part Number
EVC 135-4BNGA	1 form X (NO DM)	12	Required	On request [2]	450	Stripped wires / Screws	Bottom	15.3 Ω	2203194-1
EVC 135-5ANGA	1 form X (NO DM)	12	Optional	On request [2]	450	Stripped wires / Screws	Bottom	26 Ω	2138622-1
EVC 135-7BNGA	1 form X (NO DM	24	Optional	On request [2]	450	Stripped wires / Screws	Bottom	96 Ω	2138602-1
EVC 135-4ANHA	1 form X (NO DM	12	Required	On request [2]	450	Stripped wires / Screws	Side	15.3 Ω	2272229-1
EVC 135-4BNHA	1 form X (NO DM	12	Required	On request [2]	450	Stripped wires / Screws	Side	15.3 Ω	2138168-1
EVC 135-5BNGA	1 form X (NO DM	12	Optional	On request [2]	450	Stripped wires / Screws	Bottom	26 Ω	2098371-1
EVC 135-6BNGA	1 form X (NO DM	12	Required	On request [2]	450	Stripped wires / Screws	Bottom	3.8 Ω	2138084-1

[1] Higher currents possible depending on busbar size and cooling concept.
[2] Consult TE Connectivity for higher voltages. For details please refer to datasheet.

EVC 175 Main Contactor – Side Mount Version

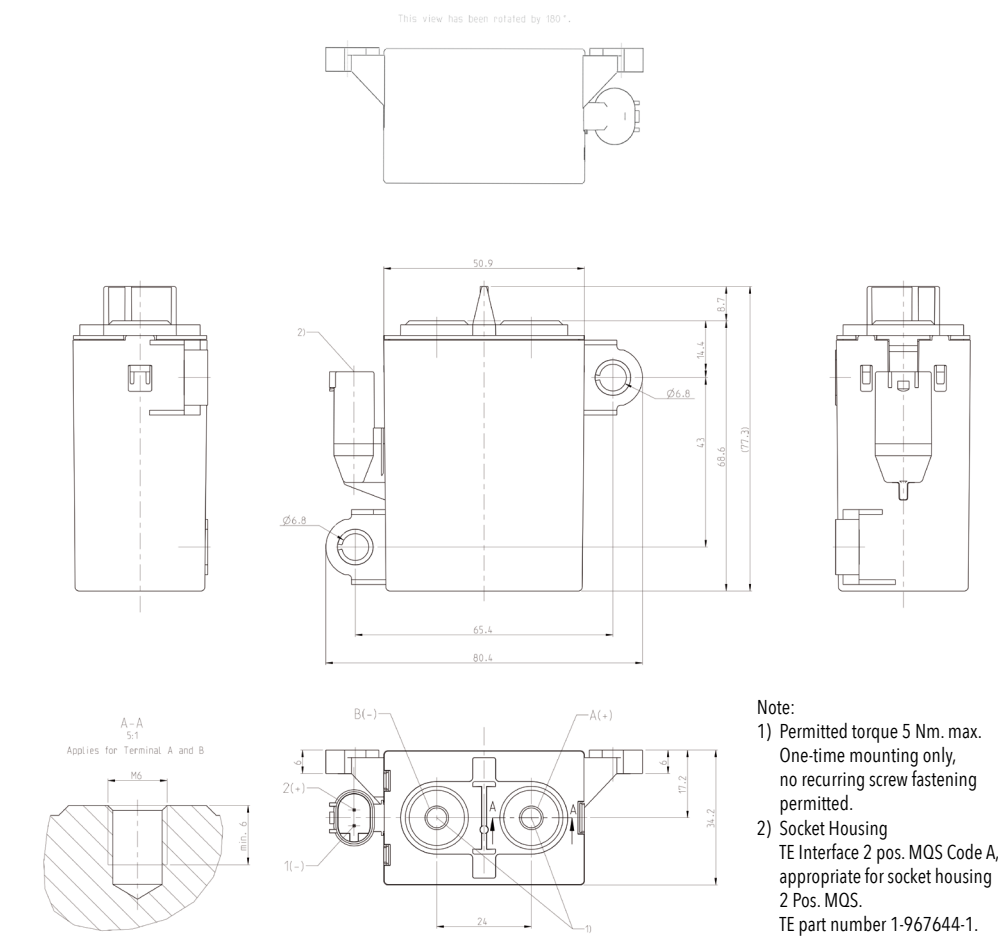

Note:
1) Permitted torque 5 Nm. max. One-time mounting only, no recurring screw fastening permitted.
2) Socket Housing TE Interface 2 pos. MQS Code A, appropriate for socket housing 2 Pos. MQS. TE part number 1-967644-1.

Tighten load connection prior to mounting flanges.

Tolerances ISO8015 / ISO2768-cL. Consult TE Connectivity for detailed mounting instructions.

Side Mount

Key Features

- Continuous current 330 A at 85°C (100 mm²) [1]
- Suitable for voltage levels up to 500 VDC [2]
- Short circuit carry capability 5,000 A
- Mounting in any direction
- Versions with and without internal economizer

Typical Applications

- DC high voltage high current applications
- Main contactors for hybrid, full battery electric vehicles and fuel cell cars
- Battery charging systems

Contact Data

Contact arrangement:
1 Form X (NO DM)

Rated voltage:
450 VDC [2]

Limiting make or break current:
210 A / 10 A (>100,000 ops.)

Short term current rating:
500 A / 0.5 min; 1,500 A / 2 s

Short circuit carry current:
5,000 A / 20 ms

Operate / release time max.:
20 / 8 ms at 12 VDC (coil voltage)

Coil Data

Rated coil voltage:
12 VDC

Coil resistance (+23°C):
5.0 Ω (single coil),
3.0 / 33.0 Ω (dual coil)

Other Data

Temperature range:
–40°C to +85°C

Category and degree of protection:
dustproof, IP 50 (upright);
IP54 [3] (others)

Terminal type and mounting:
Connector (coil) / M6 bolts (load); screws

Dimensions LxWxH (approx.):
77.3 x 50.9 x 34.2 mm
(3.0 x 2.0 x 1.3")

Weight (approx.):
295 g (10.4 oz)

Ordering Information EVC 175 Main Contactor – Side Mount Version

Product Code	Arrangement	Coil (VDC)	Econo-mization	Coil Suppr.	Rated Voltage (VDC)	Terminal Type	Mounting	Resistance	Part Number
V23717-A0001-A200	1 form X (NO DM)	12	External economizer	External > 36 V	450	Connector/ Screws	Side	5.0 Ω Single coil	6-1904123-6
V23717-A0002-A200	1 form X (NO DM)	12	Internal economizer	Internal	450	Connector/ Screws	Side	3.0 / 33.0 Ω Dual coil	2-1904070-1

[1] Higher currents possible depending on busbar size and cooling concept.
[2] Consult TE Connectivity for higher voltages. For details please refer to datasheet.
[3] Protection class applicable for all mounting orientations except load terminals on top.

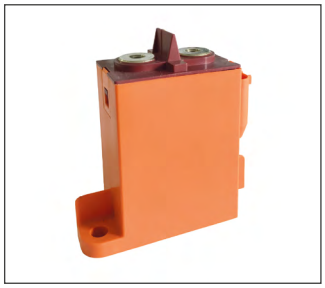

EVC 175 Main Contactor– Bottom Mount Version

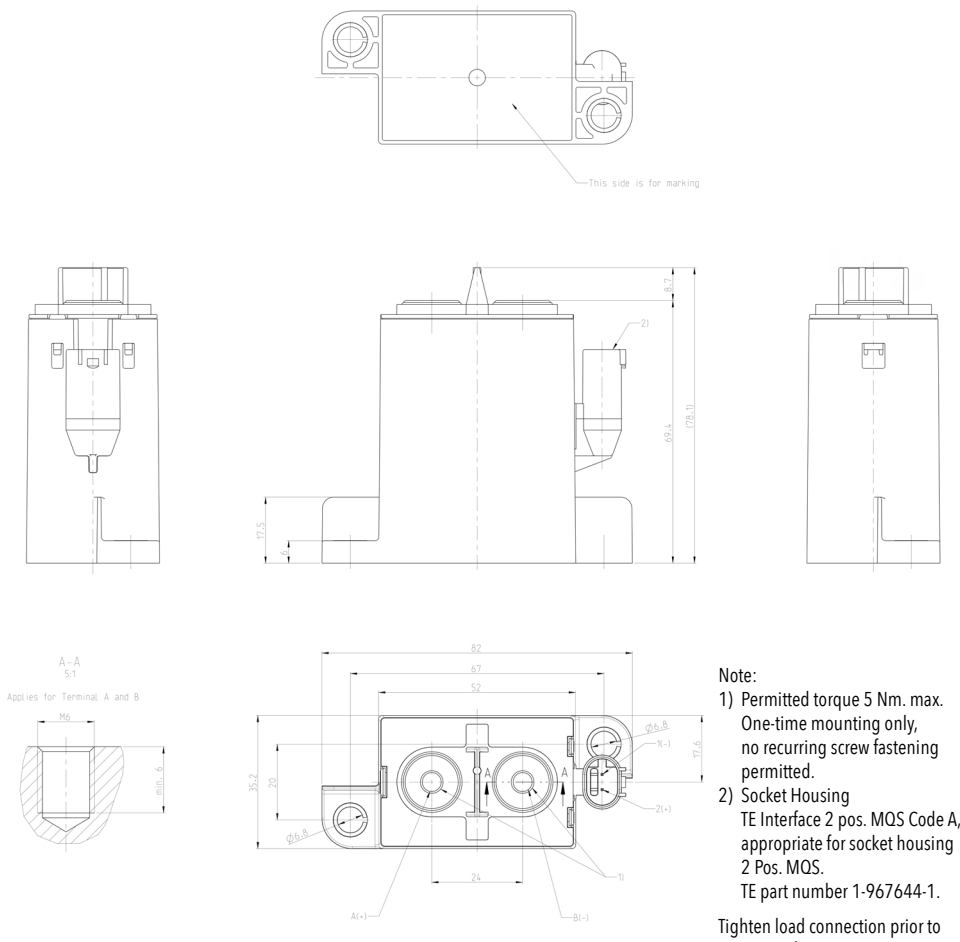

Note:
1) Permitted torque 5 Nm. max. One-time mounting only, no recurring screw fastening permitted.
2) Socket Housing TE Interface 2 pos. MQS Code A, appropriate for socket housing 2 Pos. MQS. TE part number 1-967644-1.

Tighten load connection prior to mounting flanges.

Tolerances ISO8015 / ISO2768-cL. Consult TE Connectivity for detailed mounting instructions.

Bottom Mount

Key Features

- Continuous current 330 A at 85°C (100 mm²) [1]
- Suitable for voltage levels up to 500 VDC [2]
- Short circuit carry capability 5,000 A
- Mounting in any direction
- Versions with and without internal economizer

Typical Applications

- DC high voltage high current applications
- Main contactors for hybrid, full battery electric vehicles and fuel cell cars
- Battery charging systems

Contact Data

Contact arrangement:
1 Form X (NO DM)
Rated voltage:
450 VDC [1]
Limiting cont. current at 85°C:
175 A
Limiting make or break current:
210 A / 10 A (>100,000 ops.)
Short term current rating:
500 A / 0.5 min; 1,500 A / 2 s
Short circuit carry current:
5,000 A / 20 ms
Operate / release time max.:
20 / 8 ms at 12 VDC (coil voltage)

Coil Data

Rated coil voltage:
12 VDC
Coil resistance (+23°C):
5.0 Ω (single coil),
3.0 / 33.0 Ω (dual coil)

Other Data

Temperature range:
–40°C to +85°C
Category and degree of protection:
dustproof, IP 50 (upright);
IP54 [3] (others)
Terminal type and mounting:
Connector (coil) / M6 bolts (load); screws
Dimensions LxWxH (approx.):
78.1 x 52.0 x 35.2 mm
(3.1 x 2.0 x 1.4")
Weight (approx.):
295 g (10.4 oz)

Ordering Information EVC 175 Main Contactor – Bottom Mount Version

Product Code	Arrangement	Coil (VDC)	Econo-mization	Coil Suppr.	Rated Voltage (VDC)	Terminal Type	Mounting	Resistance	Part Number
V23717-B0002-A200	1 form X (NO DM)	12	Internal economizer	Internal	450	Connector/ Screws	Bottom	3.0 / 33.0 Ω Dual coil	8-1904133-1
V23717-B0001-A200	1 form X (NO DM)	12	External economizer	External >36 V	450	Connector/ Screws	Bottom	5.0 Ω Single coil	5-1904144-3

[1] Higher currents possible depending on busbar size and cooling concept.
[2] Consult TE Connectivity for higher voltages. For details please refer to datasheet.
[3] Protection class applicable for all mounting orientations except load terminals on top.

Key Features

- Continuous current 340 A at 85°C (100 mm²) [1]
- Suitable for voltage levels up to 450 VDC [2]
- Short circuit carry capability 6,000 A
- Mounting in any direction
- Versions with and without internal economizer

Typical Applications

- DC high voltage high current applications
- Main contactors for hybrid, full battery electric vehicles and fuel cell cars
- Battery charging systems

Contact Data

Contact arrangement:
1 Form X (NO DM)

Rated voltage:
450 VDC [2]

Limiting cont. current at 85°C:
250 A

Limiting make or break current:
make: 250 A at 50 V (>50,000 ops.)
break: 100 A at 400 V (>50,000 ops.)

Short term current rating:
(1 min) 600 A

Short circuit carry current:
(25 ms) 6,000 A

Operate / release time typ.:
25 ms at 14 VDC (coil voltage)

Coil Data

Rated coil voltage:
12 VDC

Coil resistance (+23°C):
3.9 Ω (single coil),
3.6 / 36.0 Ω (dual coil)

Other Data

Temperature range:
-40°C to +85°C

Category and degree of protection:
dustproof, IP 50 (upright);
IP54 [3] (others)

Terminal type and mounting:
Connector (coil) /M6 bolts (load); screws

Dimensions LxWxH (approx.):
93.1 x 55.3 x 49.8 mm
(3.7 x 2.2 x 2.0")

Weight (approx.):
520 to 605 g (18.3 to 21.2 oz) depending on version

EVC 250 Main Contactor

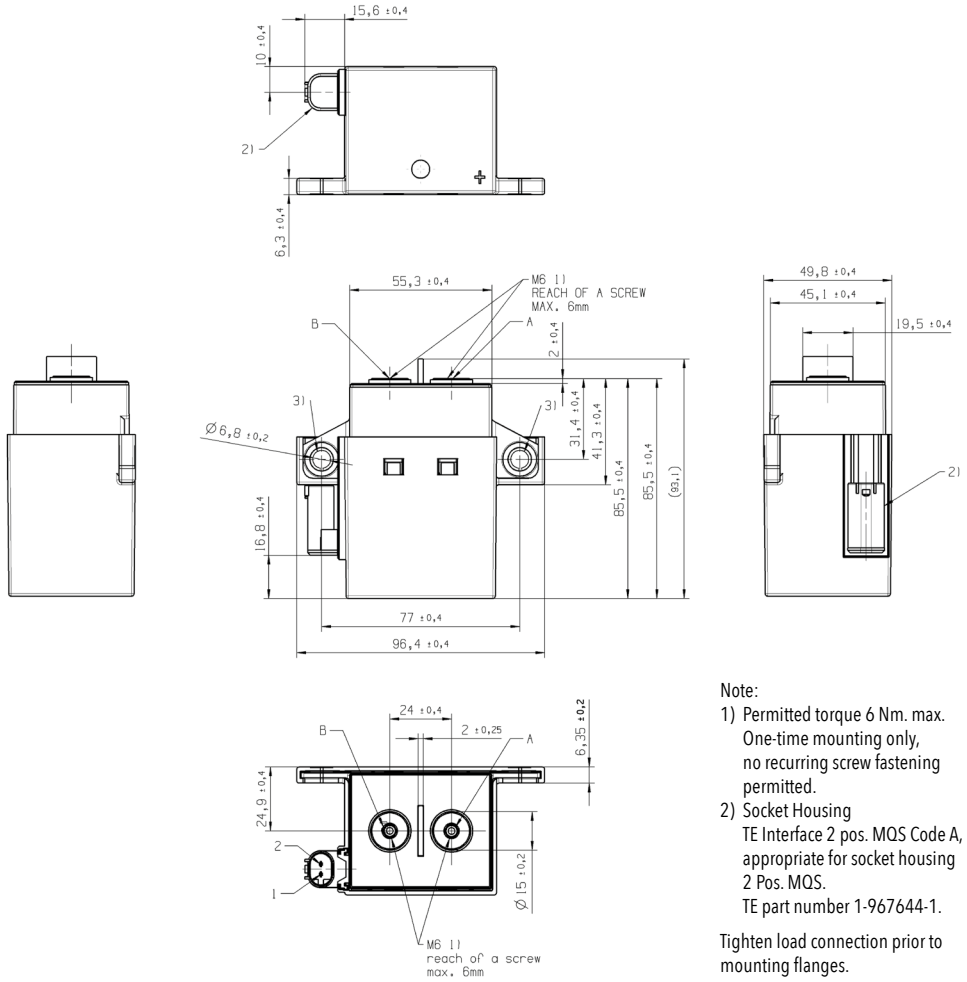

Side Mount

Note:
1) Permitted torque 6 Nm. max. One-time mounting only, no recurring screw fastening permitted.
2) Socket Housing
TE Interface 2 pos. MQS Code A, appropriate for socket housing 2 Pos. MQS.
TE part number 1-967644-1.

Tighten load connection prior to mounting flanges.

Tolerances ISO8015 / ISO2768-cL. Consult TE Connectivity for detailed mounting instructions.

Ordering Information EVC 250 Main Contactor

Product Code	Arrangement	Coil (VDC)	Econo-mization	Coil Suppr.	Rated Voltage (VDC)	Terminal Type	Mount-ing	Resistance	Part Number
V23720-A0001-A001	1 form X (NO DM)	12	No economizer	External > 36 V	450	Connector/ Screws	Side	3.9 Ω Single coil	2-1904070-2
V23720-A0002-A001	1 form X (NO DM)	12	Coil switch	Internal	450	Connector/ Screws	Side	3.6 / 36.0 Ω Dual coil	4-1904065-7

[1] Higher currents possible depending on busbar size and cooling concept.
[2] Consult TE Connectivity for higher voltages. For details please refer to datasheet.
[3] Protection class applicable for all mounting orientations except load terminals on top.

Key Features

- Continuous current 340 A at 85°C (100 mm²) [1]
- Suitable for voltage levels up to 900 VDC
- High peak current carrying capability up to 6000 A [2]
- Versions with and without internal economizer

Typical Applications

- DC high voltage high current applications
- Main contactors for hybrid, full battery electric vehicles and fuel cell cars
- Battery charging systems

Contact Data

Contact arrangement:
1 Form X (NO DM)

Rated voltage:
800 VDC

Limiting cont. current at 85°C:
250 A

Limiting make or break current:
make: 250 A at 50 V (>50,000 ops.)
break: 50 A at 800 V (>50,000 ops.)

Short term current rating:
(1 min) 600 A

Short circuit carry current:
(20 ms) 6,000 A

Operate / release time typ.:
25 ms at 14 VDC (coil voltage)

Coil Data

Rated coil voltage:
12 VDC, 24 VDC

Coil resistance (+23°C):
3.9 Ω (single coil),
2.6 / 26 Ω (12 V dual coil),
5.0 / 79 Ω (24 V dual coil)

Other Data

Temperature range:
–40°C to +85°C

Category and degree of protection:
dustproof, IP 50 (upright);
IP54 [3] (others)

Terminal type and mounting:
Connector (coil) /M6 bolts (load); screws

Dimensions LxWxH (approx.):
93.1 x 55.3 x 49.8 mm
(3.7 x 2.2 x 2.0")

Weight (approx.):
525 to 580 g (18.5 to 20.5 oz) depending on version

EVC 250-800 Main Contactor

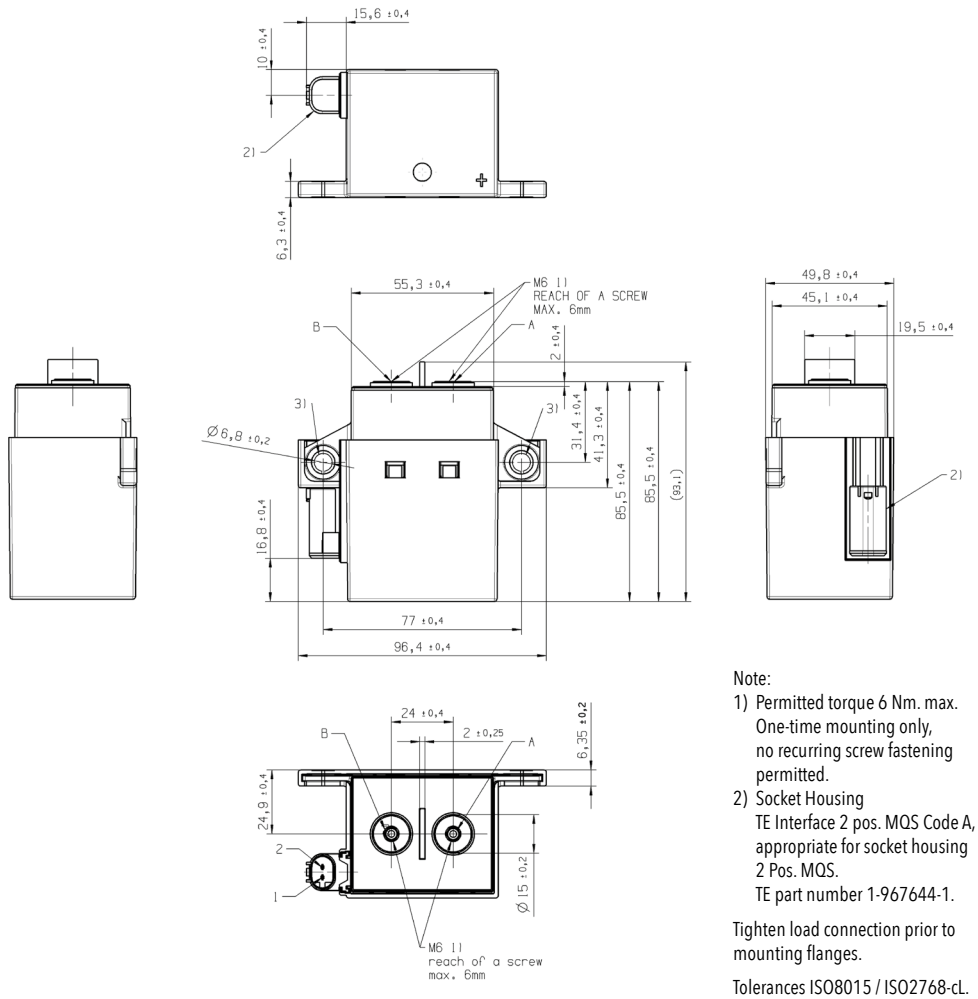

Side Mount

Note:
1) Permitted torque 6 Nm. max. One-time mounting only, no recurring screw fastening permitted.
2) Socket Housing
TE Interface 2 pos. MQS Code A, appropriate for socket housing 2 Pos. MQS.
TE part number 1-967644-1.

Tighten load connection prior to mounting flanges.

Tolerances ISO8015 / ISO2768-cL. Consult TE Connectivity for detailed mounting instructions.

Ordering Information EVC 250-800 Main Contactor

Product Code	Arrangement	Coil (VDC)	Econo-mization	Coil Suppr.	Rated Voltage (VDC)	Terminal Type	Mounting	Resistance	Part Number
V23720-A0101-B001	1 form X (NO DM)	12	External economizer	tbd	800	Connector/ Screws	Side	3.9 Ω Single coil	2-1904136-5
V23720-A0102-B001	1 form X (NO DM)	12	Dual coil int. switch	tbd	800	Connector/ Screws	Side	2.6 / 26 Ω Dual coil	7-1904137-6
V23720-A0112-B00	1 form X (NO DM)	24	Dual coil int. switch	tbd	800	Connector/ Screws	Side	5.0 / 79 Ω Dual coil	2-2317670-1

[1] Higher currents possible depending on busbar size and cooling concept.
[2] Consult TE Connectivity for higher voltages. For details please refer to datasheet.
[3] Protection class applicable for all mounting orientations except load terminals on top.

EVC 500 Main Contactor

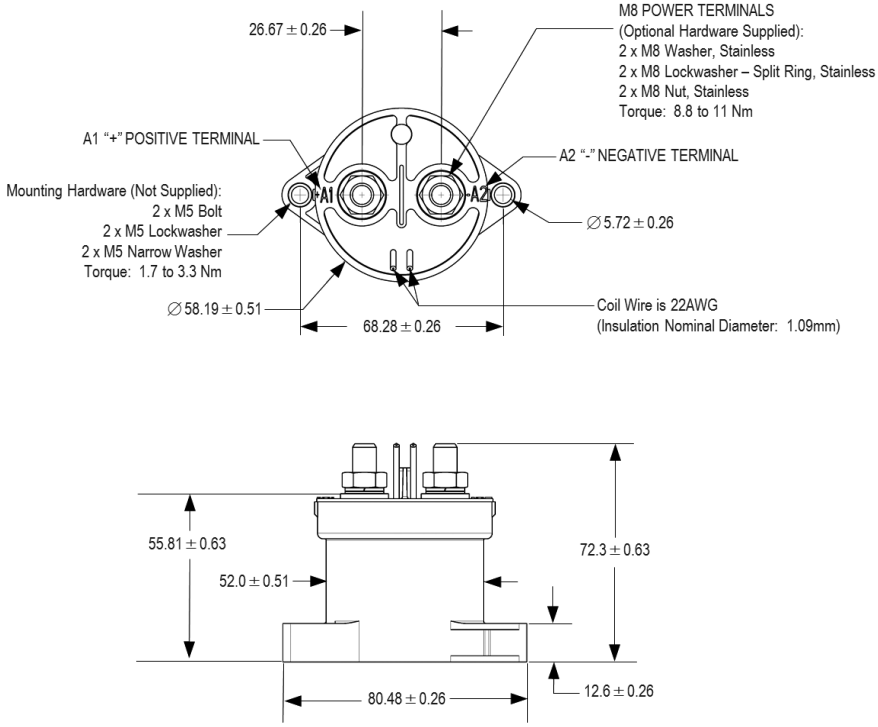

Bottom Mount (without coil economizer)

Key Features

- Continuous current 500 A at 85°C (214 mm²)
- Load voltage up to 450 VDC [1)]
- Short circuit carry capability 3,500 A
- Optional coil economizer
- Robust bottom mounting with optional economizer enclosure

Typical Applications

- Main contactor for hybrid and electric vehicles

Contact Data

Contact arrangement:
1 Form X (NO DM)
Rated voltage:
450 VDC [1)]
Limiting cont. current at 85°C:
500 A
Limiting make or break current:
150 A / 150 A (>10,000 ops.)
Short term current rating:
(1 min) 800 A
Short circuit carry current:
3,500 A
Operate / release time typ.:
20 ms / 12 ms

Coil Data

Rated coil voltage / power:
12 VDC
Rated coil power:
PWM required
Coil resistance (+23°C):
3.14 Ω

Coil Data

Temperature range:
–40°C to +85°C
Category and degree of protection:
hermetically sealed
Terminal type and mounting:
Stripped wires (coil) / M8 bolts (load); screws
Dimensions LxWxH (approx.):
80.5 x 58.2 x 72.3 mm
(3.2 x 2.3 x 2.9")
Weight (approx.):
430 g (15.2 oz)

Ordering Information EVC 500 Main Contactor

Product Code	Arrange-ment	Coil (VDC)	Econo-mization	Coil Suppr.	Rated Voltage (VDC)	Terminal Type	Mounting	Resis-tance	Part Number Asia Production Americas Prod.
EVC 500-A1ANAM	1 form X (NO DM)	12	No economizer	External > 40 V	450	Stripped wires / Screws	Bottom	3.14 Ω	2219561-1 2098372-1
EVC 500-AAANAM	1 form X (NO DM)	12	Internal PWM	Internal	450	Stripped wires / Screws	Bottom	3.14 Ω	2299223-2 2098190-1

[1)] Consult TE Connectivity for higher voltages. For details please refer to datasheet.
[2)] Protection class applicable for all mounting orientations except load terminals on top.

NOTES

RUGGEDIZED, QUALITY SWITCHING PRODUCTS

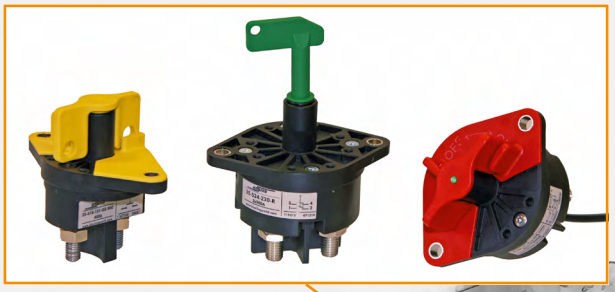

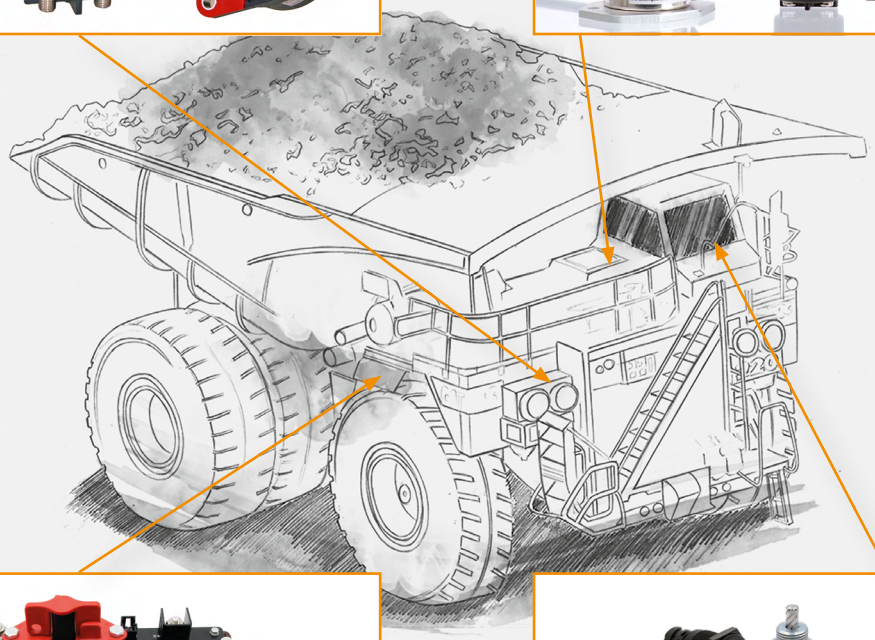

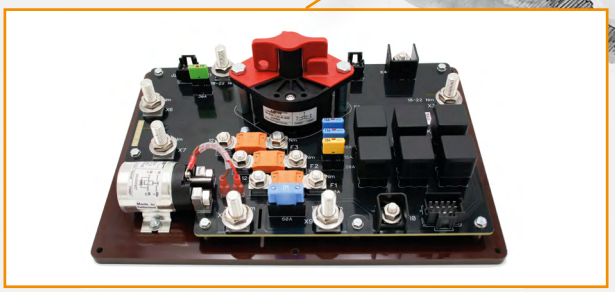

Key capabilities aligned with fast-growing electrification and safety trends within High-Voltage Power Distribution by KISSLING, a TE Connectivity Company

E-Mobility is playing an increasingly important role in the design of new generation commercial vehicles, including trucks, buses, construction and working vehicles. The move to electric drive system brings a number of environmental advantages but also poses some major challenges with handling high on-board power and charging currents and meeting stringent safety requirements under possibly harsh operating environments.

KISSLING, a TE Connectivity Company, is an industry leading provider of high power and high voltage relays and ruggedized switches used in commercial vehicle, transportation, industrial and other applications.

Product page or contact us: info.kissling@te.com

NOTES

APPLICATION TOOLING

HIGH VOLTAGE CABLE PROCESSING SOLUTIONS

A FLEXIBLE APPROACH TO LARGE WIRE CABLE PROCESSING

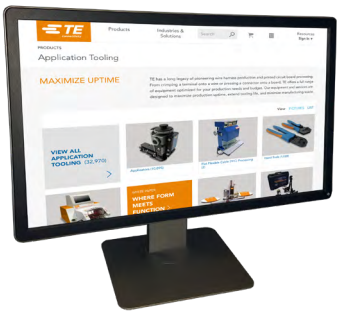

Let's Connect

To find the right TE tooling for your needs, call us at **+1.717.810.2082** or email **toolingSales@te.com.**

For more product information please visit te.com/hvtooling

TE Technical Support Center

USA:	+1.1.800.522.6752	UK:	+44.0800.267666
Canada:	+1.800.522.6752	France:	+33.1.34.20.8686
Mexico:	+52.55.11.06.0800	Netherlands:	+31.73.624.6999
Latin/S. America	+54.11.4733.2200	China:	+86.400.820.6015
Germany:	+49.6151.607.1999		

FLEXIBLE HIGH FORCE PROCESSING SOLUTIONS

TE Connectivity (TE) offers a wide range of wire processing solutions to handle challenging small wire applications up through complex 120 mm² high voltage cables. Our high force lineup gives you the power needed to process large wire applications in a fast, flexible, and affordable format.

Challenges of High Voltage Cables

High voltage cables require clean, precise cuts to maintain quality and safety standards. The TE suite of high force cable prep and termination equipment has been designed around those very high standards.

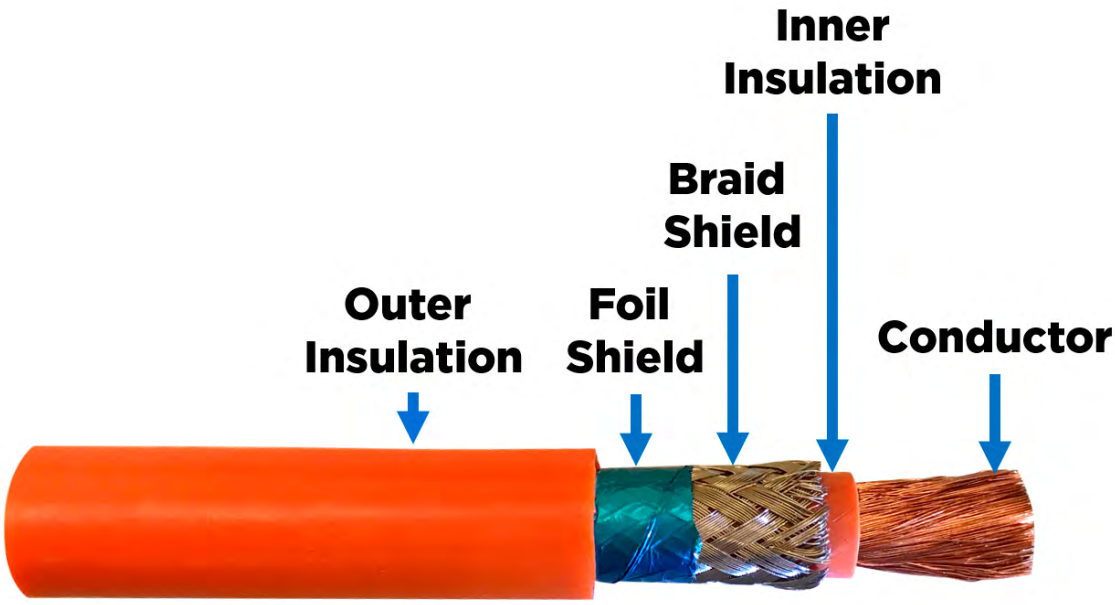

HIGH FORCE TERMINATING SOLUTIONS

HV Modular Die Sets

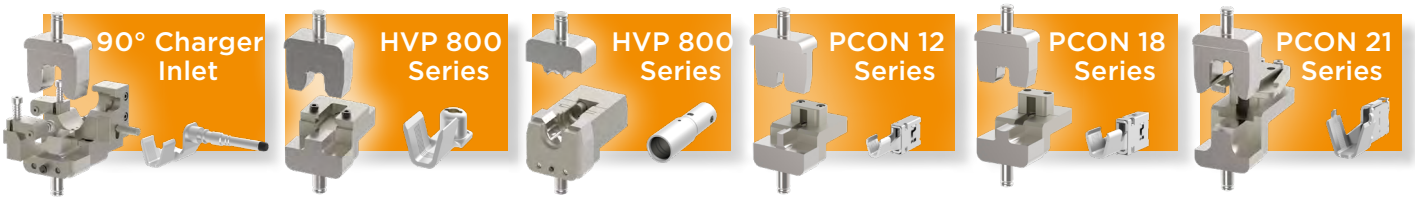

This is only a cross section of die sets and terminals available. Our modular die holders can accommodate both TE and non-TE terminals. For a more complete list please visit tooling.te.com or contact your TE Application Tooling sales representative.

HV Modular Die Holders — Loaded with Features

With Fine Adjust for HV-20 Machines

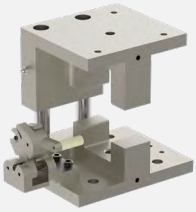

For AT-66 Machines

The multi-platform design of our modular HV die holders allows for use in a variety of TE and non-TE terminators.

Fine adjust feature allows for faster, more precise crimp height adjustment.

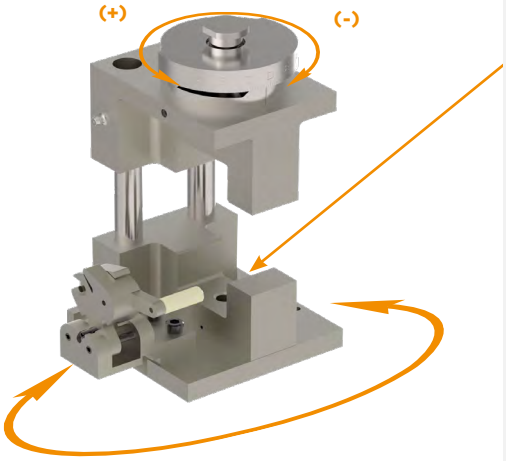

The wire clamp assembly, handle and die sets can easily be adjusted to handle left or right side wire processing.

Spring-loaded wire clamp assembly accommodates a variety of different wire sizes to match your processing needs.

Modular Die Holder Part Numbers

	Description	Part Number
Die Holders	HV MOD Die Holder w/Fine Adjust	2305470-1
	HV MOD Die Holder w/o Fine Adjust For AT-66 Terminator only (Can not be used in HV-20 or HF-20 Terminators)	2326378-1

HIGH VOLTAGE WIRE PROCESSING

Part Number 2335400-1

Take the complexity and long preparation times out of your high voltage cable processing with the new HV-CP machine from TE. This machine can process (10 - 120 mm^2) multi-layered conductors in as fast as 30 seconds!

Multi-Step Stripping

The HV-CP machine will strip the outer jacket, foil shield, braid shield, and inner insulation to meet your termination specifications.

To confirm proper preparation of the cable, several unique quality control measures are in place.

- The machine has the ability to confirm installation of the proper tooling before running
- The HV-CP can self-calibrate the blade positions after tooling changeover
- The machine confirms cable position before and after the prep process to onfirm proper strip lengths

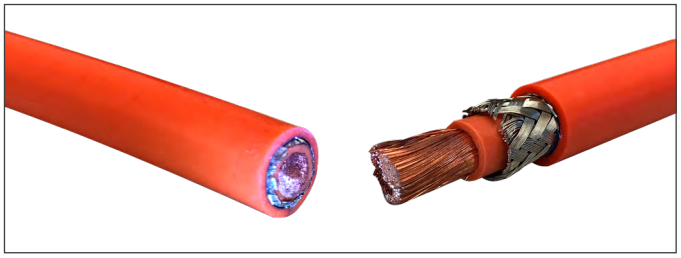

Process complex multi-layered HV cables in as fast as 30 seconds!

For ease-of-use the HV-CP machine has an intuitive touch screen interface with a memory that accommodates up to 1,500 different profiles.

Specifications

Description	Specification	Description	Specification
Wire Cross Section	10 mm^2 – 120 mm^2	Increments for Incision Diameter	0.01 mm (0.0004 in)
Max. Outer Diameter	25.0 mm (1 in)	Increment for Stripping Length	0.01 mm (0.0004 in)
Min Diameter of Inner Conductors	6.0 mm (0.24 in)	Maximum Outer Jacket Strip Length	80 mm (3.15 in)
Max Wire Cross Section for Cutting	2 mm^2 / AWG 14 / 1.6 mm diam (0.063 in diam)	Profile Library: Max Number of Articles	1500
Typical Cycle Time	30 sec	Sequence Function: Max Number of Steps	100

High Voltage Cable Prep Spare Tooling Part Numbers

Machine Part#	Cable Size (mm2)	Outer Diameter	Core Diameter	Conductor Diameter (mm Max)	Contour Blade Assembly Kit Part #	Mandrel Assembly Kit Part #	Cutting Wheels Part #
2335400-1	10	8.8 (-0.6)	6.0 (-0.6)	4.5	2364113-1	2360456-1	2844837-1
	16	10.2 (-0.6)	7.2 (-0.6)	5.8	2364113-2	2360456-2	
	25	12.2 (-0.6)	8.7 (-0.6)	7.2	2364113-3	2360456-3	
	35	14.4 (-0.6)	10.4 (-0.7)	8.5	2364113-4	2360456-4	
	50	15.8 (-0.6)	12.2 (-0.7)	10.5	2364113-5	2360456-5	
	60	16.9 (-0.6)	13.3 (-1.2)	11.6	2364113-6	2360456-6	
	70	18.2 (-0.6)	14.4 (-1.2)	12.5	2364113-7	2360456-7	
	95	20.9 (-0.6)	17.2 (-1.2)	14.8	2364113-8	2360456-8	
	120	23 (-0.8)	19 (-1.2)	16.5	2364113-9	2360456-9	

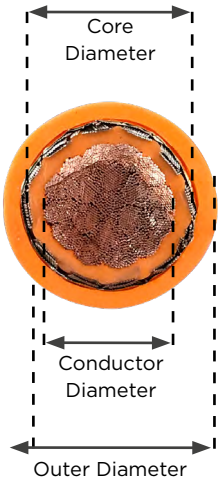

HV-CP FEATURES

Combining sophisticated controls, traceability system and equipped with ethernet and USB ports, the HV-CP high voltage cable prep machine is Industry 4.0 ready.

Integrated air jets for automatic blade cleaning and an in-line vacuum to remove slugs keep the processing area clean and efficient. A removable container is located inside the chassis for easy waste disposal.

HIGH VOLTAGE WIRE TERMINATION

The HF-20 and HV-20 are robust, compact, high force bench top machines capable of terminating cables up to 120 mm^2.

Both models are eccentric presses capable of reaching 178kN (20T) of crimp force, with fast, repeatable accuracy. The HV-20 model comes with a CQM II digital interface for crimp force monitoring, variable speed and an integrated vacuum system to keep sensitive connections clean and clear of debris commonly associated with high voltage cable processing.

Flexible Design

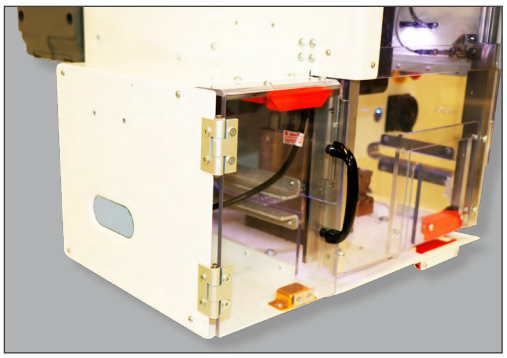

To best fit the application process, the flexible design of the high force machines accommodates multiple processing orientations.

The adjustable die holder platform can be easily rotated to handle processing from the left, front or right side of the unit. Side feed guarding is also available for all models to accommodate both loose piece and reeled terminal applications.

Safe, Easy Operation

Both models offer a simple push button design with multiple interlock features to confirm operator safety throughout the crimping process.

High Force Terminator Part Numbers

	Description	Press Part Number	
		w/Loose Piece Guarding	w/Side Feed Guarding (for reeled terminals)
Terminator	HF-20, High Force Terminator, 400V	2335500-1	2358697-1
	HF-20, High Force Terminator, 200V	2335500-2	2358697-2
	HV-20, High Voltage Terminator, 400V	2348822-1	2358698-1
	HV-20, High Voltage Terminator, 200V	2348822-2	2358698-2

SIDE-BY-SIDE COMPARISON


	HF-20T	HV-20T	Competitor 1 Large Press Offering	Competitor 2 Large Press Offering
Force	178kN (20T)	178kN (20T)	150kN (17T)	178kN (20T)
Max Wire	120 mm^2	120 mm^2	100 mm^2	120 mm^2
Variable Stroke (Sec) Speed (RPM)	1.3 - 8.3 Sec 288 - 1800 RPM	1.3 - 8.3 Sec 288 - 1800 RPM	1.2 Sec (fixed) 1420 RPM	(fixed) 1200 RPM
Power	3kW	3kW	4kW	7.5 kW
Supply	200V & 400V	200V & 400V	400V	200V & 400V
Stroke / Shut Height	44 mm / 158.4 mm	44 mm / 158.4 mm	50 mm / 204.8 mm	50 mm / 190 mm
Weight	390 kg	390 kg	500 kg	1550 kg
Network/MES	RJ-45 / MQTT	RJ-45 / MQTT	-	-
Particle Vacuum	-	Yes	No	No
Guard Auto Lift	Yes	Yes	Yes	Optional
CQM/CFM	-	Yes	Optional	Optional

HV-20T & HF-20T FEATURES

INDUSTRY 4.0 READY

Combining sophisticated controls, traceability system and equipped with ethernet and USB ports, the HV-20T and HF-20T bench-top terminators are Industry 4.0 ready.

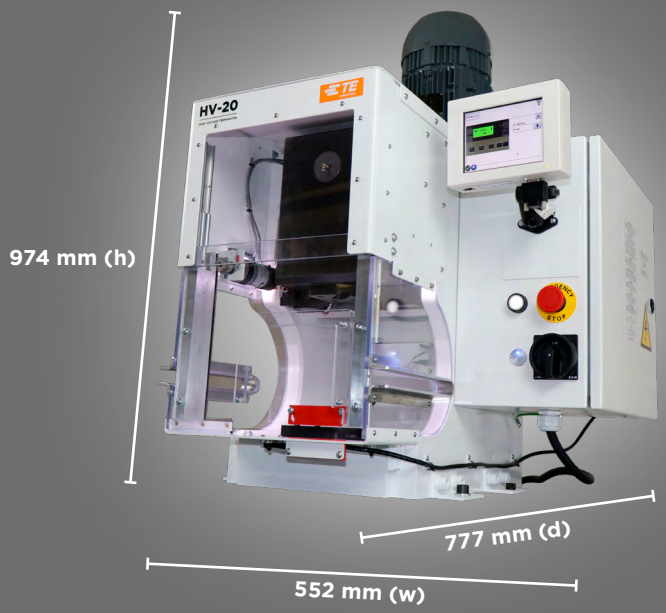

The integrated vacuum system design keeps sensitive connections clean and clear of debris commonly associated with high voltage cable crimping.

Standards

Specifications

TE Connectivity connectors are still made on IEC 664/664 A, DIN VDE 0110/01.89 and DIN VDE 0627/06.86 standards. The standards have defined normal rules and requirements which include features construction and requirements.

To determine the minimum clearances and creepage distance, the recent applicable standard is the IEC 60664-1 standard (10.92), a fundamental safety standard to which all product in the committees should refer.

If no notice to products in the catalog, clearance and creepage distances of all products in the catalog are based on DIN VDE 0110:1989-01 and degrees pollution 3.

Include some contents:

1. Over-voltage categories (I, II, III, IV)
2. Degrees of pollution
3. Insulating material
4. Determination of clearances

Over-Voltage Categories

1. Over-voltage category I

Equipment in over-voltage category I is only intended for use in apparatus or parts of systems in which no over-voltages will occur or are specially protected against over-voltages by means of surge voltages, filters or capacitors.

2. Over-voltage category II

Equipment in over-voltage category II is intended for use in systems or parts there of in which lighting over-voltages do not have to be taken into account.

3. Over-voltage category III

Equipment in over-voltage category III is intended for use in equipment for fixed installation, i.e. protective devices, relays, switches and plug devices.

Insulation Coordination for Electrical Connectors in Low Voltage Plants

Dimensioning of clearance and creeping distances acc. to DIN EN60664-1; following pages show only a part of the standards.

Insulation Coordination

Insulation coordination includes the design of the electrical insulation of a connector depending on its use and environment. This occurs either by design of the clearance distances (basis is the expected power surge) or by design of the creeping distance (basis is the operating voltage as well as the quality of the insulating material). Furthermore, insulation-changing conditions are taken into account (pollution, protective measures against pollution, air pressure, thermal or chemical influences).

Air distances are measured according to the outer or inner power surge expected. The four power surge classes (power surge categories I to IV) take the different use of the connector into account. Depending on the homogeneity of the field between the electrodes (case A – inhomogenous field, case B – homogenous field) the air distances can be determined according to table 2a (minimum air distances); industrial connectors are always determined according to case A.

The influence from pollution when determining the air- and creeping distances is taken into account by using four degrees of severity (pollution degree 1 to 4).

Basis of the creeping distances is the rated voltage which is deduced from the operating voltage. The minimum creeping distances are allocated in table 4 depending on the severity of pollution. If the product descriptions do not contain any additional information the products listed in this catalog were rated according to norm DIN VDE 0110 for surge category III and severity of pollution 3.

Surge Category I to IV

- Resources of surge category I are goods for the termination of fixed electrical installations of a building. Measures for the limitation of transient surges were taken either in the fixed installation or between the fixed installation and the equipment.
- Resources of surge category II are resources which use power and are fed from a fixed installation. Note: e.g. domestic appliances, portable tools and other appliances as well as similar consumers.
- Resources of surge category III are part of a fixed installation. They are resources from which a high degree of availability is expected.
- Note: Examples for such appliances are e.g. industrial connectors, distribution panels, power switches, distributors, switches, sockets.
- Devices of surge category IV are for use at the supply terminal of the installation. Note: Examples for such appliances are electricity counters, overload cut-out switches.

Pollution Degree 1 to 4

DIN VDE 0110 defines the pollution degrees as follows:

Pollution Degree 1:
There is no or only dry, non-conductive pollution. The pollution is without influence.
Pollution Degree 2:
There is only non-conductive pollution. Occasional momentary conductivity due to condensation.
Pollution Degree 3:
There is conductive pollution or dry non-conductive pollution, which becomes conductive due to condensation.
Pollution Degree 4:
There is a continuous conductivity due to conductive dust, rain or moisture.

Insulation Material

The insulation materials are divided into the following four groups depending on their comparative tracking index (CTI):

Insulation material I:	600 ≤ CTI
Insulation material II:	400 ≤ CTI < 600
Insulation material III a:	175 ≤ CTI < 400

Measurement of Clearances

Diagram for the Determination of Clearances

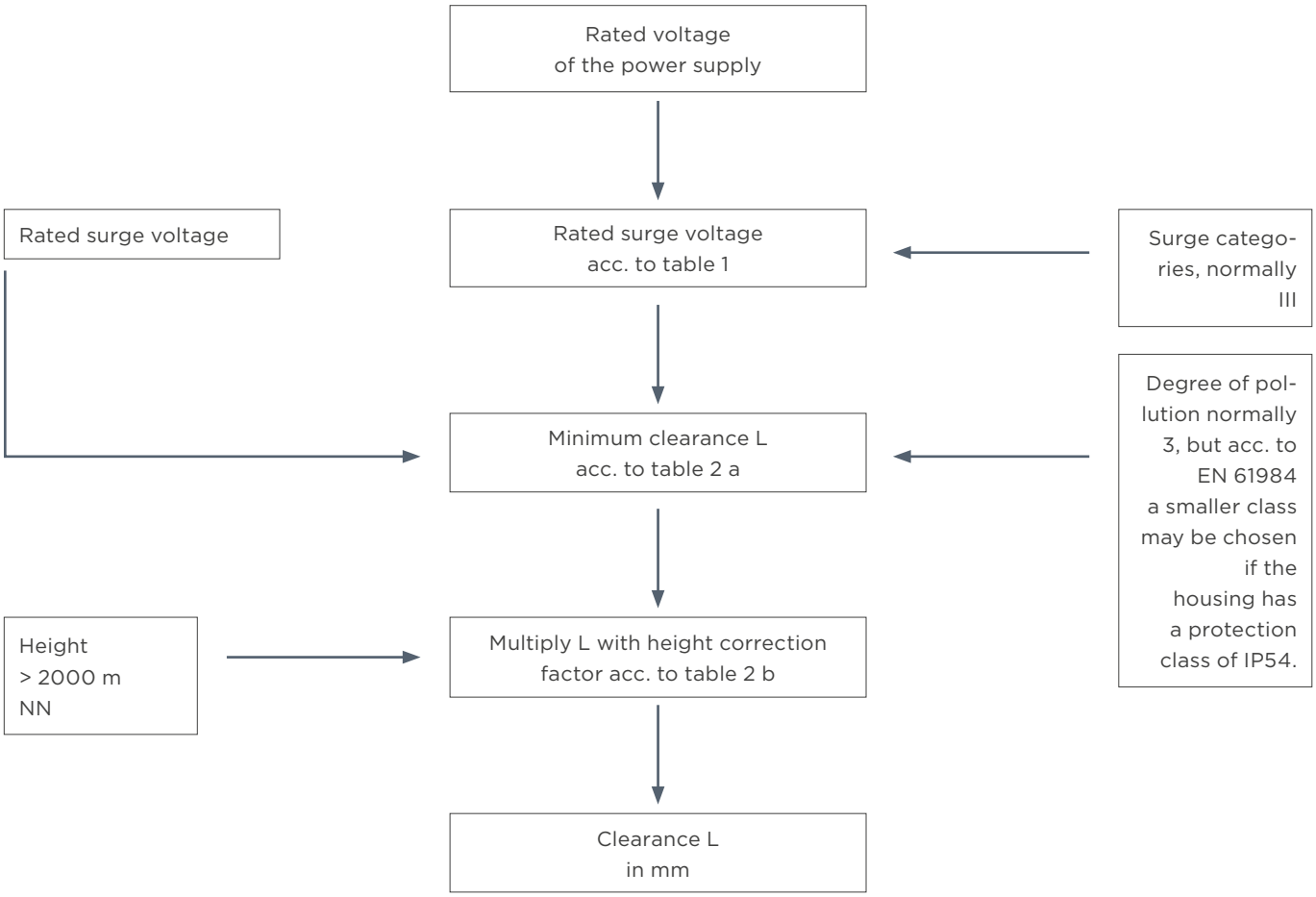

Rated Surge Voltage for Utilities

Rated Voltage of the Power Supply* in V		Rated Surge Voltage in kV (1.2/50ms) for			
3-phase systems	Single systems in the centre	Utilities at the feed of the installation (surge category IV)	Utilities as part of a fixed installation (surge category III)	Utilities for con-nection to fixed instal-lations (surge category II)	Specially protected utilities (surge category I)
	120 up to 240	4	2.5	1.5	0.8
230/400** 277/480**		6	4	2.5	1.5
400/690**		8	6	4	2.5
1000		12	8	6	4

*) Chosen voltage values

**) The / dash is for a 3-phase system with 4 lines. The lower value is for phase to neutral, the higher value is for phase to phase.

Minimum Clearance in Air at Installation Heights of up to 2000 m above Sea Level (NN)

Rated surge voltage [kV]	Case A, inhomogenous field, degree of pollution				Case B, homogenous field, degree of pollution			
	1 (mm)	2 (mm)	3 (mm)	4 (mm)	1 (mm)	2 (mm)	3 (mm)	4 (mm)
0.33 _)	0.01	_)	0.80	1.6	0.01	_)	0.8	1.6
0.40	0.02				0.02	0.2		
0.5 _)	0.04				0.04			
0.60	0.06				0.06			
0.80 _)	0.10	0.2			0.10			
1.0	0.15				0.15			
1.2	0.25	0.25			0.2			
1.5 _)	0.5	0.5			0.3	0.3		
2.0	1.0	1.0	1.0		0.45	0.5		
2.5 _)	1.5	1.5	1.5		0.6	0.6		
3.0	2	2	2	2	0.8	0.8		
4.0 _)	3	3	3	3	1.2	1.2	1.2	
5.0	4	4	4	4	1.5	1.5	1.5	
6.0 _)	5.5	5.5	5.5	5.5	2	2	2	2
8.0 _)	8	8	8	8	3	3	3	3
10	11	11	11	11	3.5	3.5	3.5	3.5
12 _)	14	14	14	14	4.5	4.5	4.5	4.5
15	18	18	18	18	5.5	5.5	5.5	5.5
20	25	25	25	25	8	8	8	8
25	33	33	33	33	10	10	10	10
30	40	40	40	40	12.5	12.5	12.5	12.5
40	60	60	60	60	17	17	17	17
50	75	75	75	75	22	22	22	22
60	90	90	90	90	27	27	27	27
80	130	130	130	130	35	35	35	35
100	170	170	170	170	45	45	45	45

1) The voltage is for
- Functional insulation: the maximum impulse voltage expected to occur across the clearance
- Basic insulation directly exposed by transient overvoltages
- Other basic insulation

_) Preferred values

Factors for Height Correction

Height in m	Normal Air Pressure in kPa	Multiplication Factor for Distances
2000	80.0	1.00
3000	70.0	1.14
4000	62.0	1.29
5000	54.0	1.48
6000	47.0	1.70
7000	41.0	1.95
8000	35.5	2.25
9000	30.5	2.62
10000	26.5	3.02
15000	12.0	6.67
20000	5.5	14.50

Measurement of Creepage

Diagram for the Determination of Creepage

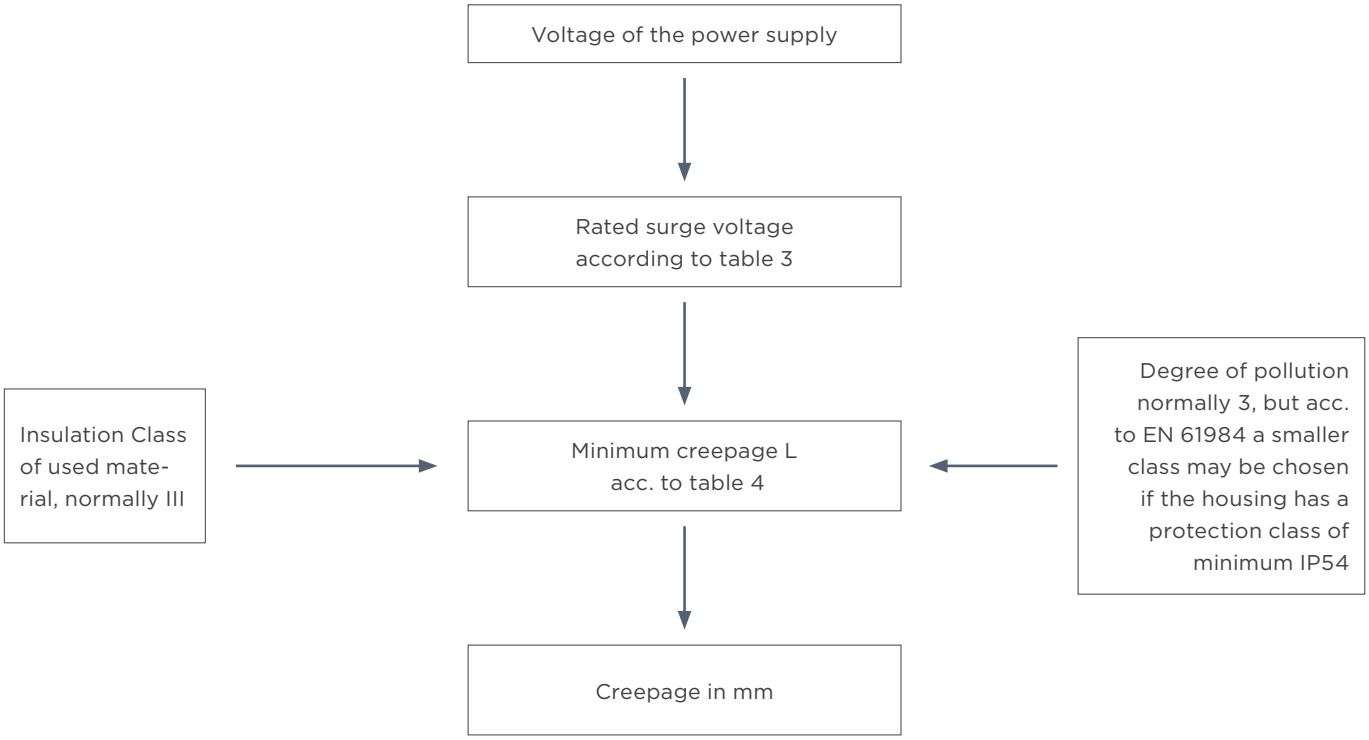

Voltage of the Power Supply [V]	Rated Voltage [V]
60	63
110/120/127	125
150	160
208	200
220/230/240	250
300	320
380/400/415	400
440	500
480/500	500
575	630
600	630
660/690	630
720/830	800
960	1000
1000	1000

Table 3

*The above shown table does not give the entire correlation of world-wide used networks and rated voltages; it is reduced to the most common ones; further details, see DIN EN60664-1.

Creepages in [mm] for Electrical Equipments

Rated Voltage [V]	Degree of Pollution									
	1 All Insulator Classes	2 Insulation Class			3 Insulation Class			4 Insulation Class		
		I	II	III	I	II	III	I	II	III
10	0.08	0.40	0.40	0.40	1.00	1.00	1.00	1.6	1.6	1.6
12.5	0.09	0.42	0.42	0.42	1.05	1.05	1.05	1.6	1.6	1.6
16	0.10	0.45	0.45	0.45	1.10	1.10	1.10	1.6	1.6	1.6
20	0.110	0.48	0.48	0.48	1.20	1.20	1.20	1.6	1.6	1.6
25	0.125	0.50	0.50	0.50	1.25	1.25	1.25	1.7	1.7	1.7
32	0.140	0.53	0.53	0.53	1.30	1.30	1.30	1.8	1.8	1.8
40	0.16	0.56	0.80	1.10	1.4	1.6	1.8	1.9	2.4	3.0
50	0.18	0.60	0.85	1.20	1.5	1.7	1.9	2.0	2.5	3.2
63	0.20	0.63	0.90	1.25	1.6	1.8	2.0	2.1	2.6	3.4
80	0.22	0.67	0.95	1.3	1.7	1.9	2.1	2.2	2.8	3.6
100	0.25	0.71	1.00	1.4	1.8	2.0	2.2	2.4	3.0	3.8
125	0.28	0.75	1.05	1.5	1.9	2.1	2.4	2.5	3.2	4.0
160	0.32	0.80	1.1	1.6	2.0	2.2	2.5	3.2	4.0	5.0
200	0.42	1.00	1.4	2.0	2.5	2.8	3.2	4.0	5.0	6.3
250	0.56	1.25	1.8	2.5	3.2	3.6	4.0	5.0	6.3	8.0
320	0.75	1.60	2.2	3.2	4.0	4.5	5.0	6.3	8.0	10.0
400	1.00	2.00	2.8	4.0	5.0	5.6	6.3	8.0	10.0	12.5
500	1.30	2.50	3.6	5.0	6.3	7.1	8.0	10.0	12.5	16.0
630	1.8	3.2	4.5	6.3	8.0	9	10.0	12.5	16	20
800	2.4	4.0	5.6	8.0	10.0	11	12.5	16.0	20	25
1000	3.2	5.0	7.1	10.0	12.5	14	16.0	20.0	25	32

Table 4

NOTES

NOTES

TE CONNECTIVITY ONLINE

TE.com offers an enhanced digital experience, with more than 250,000 parts profiled. The site has deep, rich product data and easier access to tools and services. Other offerings include improved search and navigation combined with knowledge and idea sharing.

PRODUCTS BY APPLICATIONS

Learn more about our hybrid and electric mobility solutions by searching according to the vehicle's application area:

www.te.com/hybrid-electric-mobility

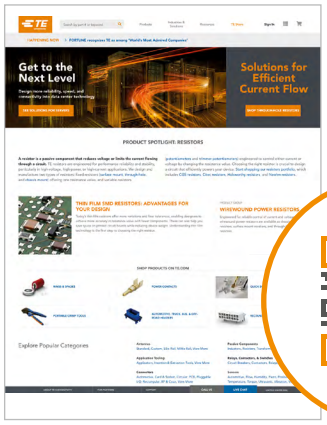

PRODUCT INFORMATION

Search for a specific product by category, part number or document number.

www.TE.com

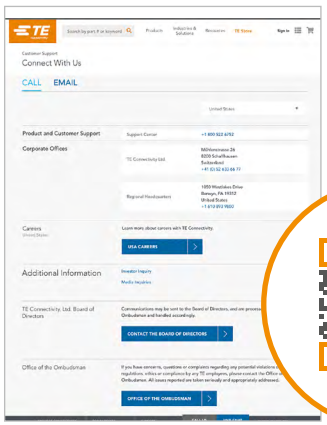

STAY CONNECTED

You can rely on our Product Information Center (PIC) team to answer your general or technical questions. To contact a PIC representative, visit

www.TE.com/support-center

EUROPE

Germany

Product Information Center:
Phone: +800 0440-5100
Fax: +49 6251-133-1988

UNITED STATES

United States – Harrisburg

Product Information Center:
Phone: +1 800-522-6752
Fax: +1 717-986-7575

SOUTH AMERICA

South America

Phone: +54 11-4733-2015
Fax: +54 11-4733-2083

AFRICA

South Africa – Port Elizabeth

Phone: +27 41-503-4500
Fax: +27 41-581-0440

ASIA/PACIFIC

Australia – Sydney

Product Information Center:
Phone: +61 2-9840-8200
Fax: +61 2-9634-6188

People's Republic of China

Hong Kong
Phone: +852 2738-8731
Fax: +852 2735-0243

People's Republic of China

Shanghai
Phone: +86 21-3398-0000
Fax: +86 21-3398-1999

Korea – Seoul

Phone: +82 2-3415-4500
Fax: +82 2-3486-3810

DISCLAIMER

This document reflects the state-of-the-art result of the work of TE Connectivity (TE). While TE has made every reasonable effort to ensure the accuracy of the information in this document, TE does not guarantee that it is error-free, nor does TE make any other representation, warranty or guarantee that the information is accurate, correct, reliable or current. TE expressly disclaims all implied warranties regarding the information contained herein, including, but not limited to, any implied warranties of merchantability or fitness for a particular purpose. The document is subject to change without notice. Consult TE for the latest dimensions and design specifications.

TRADEMARKS

AMP+, AMP MCP, EVC, MQS, PCON, TE, TE Connectivity, TE connectivity (logo), and EVERY CONNECTION COUNTS are trademarks owned or licensed by the TE Connectivity Ltd. family of companies.

USCAR is a trademark.

Other product names, logos, and company names mentioned herein may be trademarks of their respective owners.

COPYRIGHT

1654294-4 | Revision 04-2022

TE Connectivity Germany GmbH
Ampèrestrasse 12–14
64625 Bensheim
Germany